REVISIONS				
LTR	DESCRIPTION	PREP'D BY	DATE	APPROVED

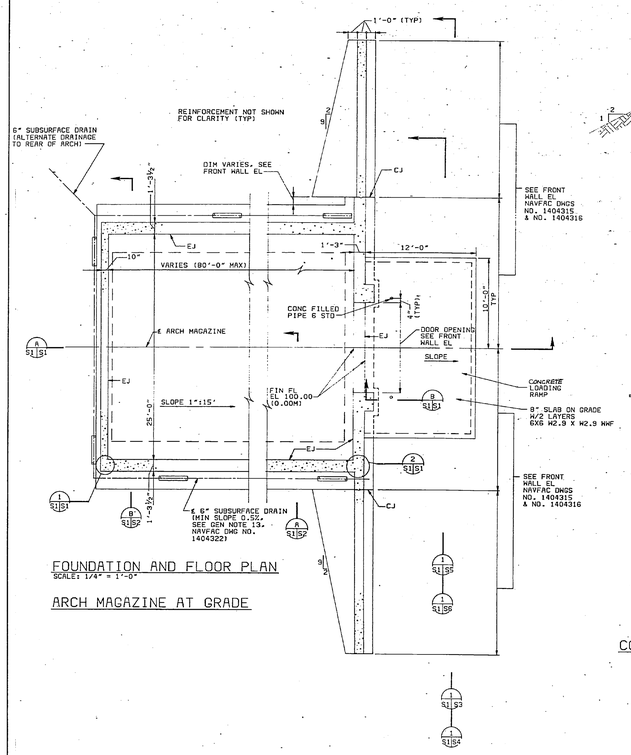

FOUNDATION AND FLOOR PLAN
SCALE: 1/4" = 1'-0"

ARCH MAGAZINE AT GRADE

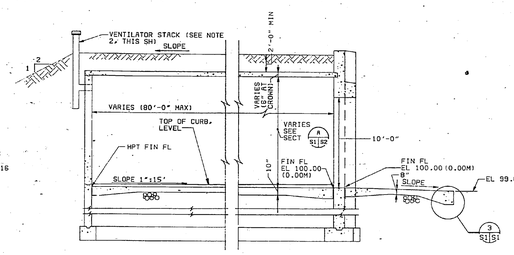

SECTION A
SCALE: 1/4"=1'-0"

NOTE: REINFORCEMENT NOT SHOWN FOR FOR CLARITY (TYP). SEE NAVFAC DWG NO. 1404314 FOR BACKFILL MATERIAL.

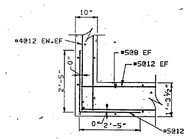

DETAIL 1
SCALE: 1½"=1'-0"

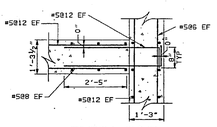

DETAIL 2
SCALE: 1½"=1'-0"

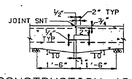

CONSTRUCTION JOINT SLAB ON GRADE
NO SCALE

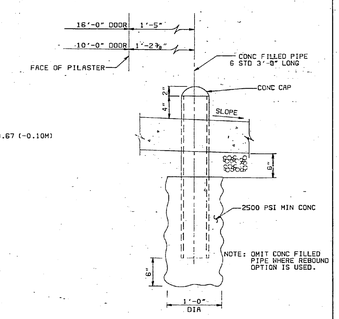

SECTION B
SCALE: 1½"=1'-0"

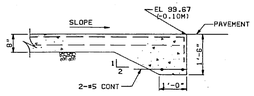

DETAIL 3
SCALE: 1½"=1'-0"

NOTES:

1. DET 1 AND DET 2, THIS SHEET, SHOW CONDITIONS BELOW FLOOR SLAB.
2. SEE NAVFAC DWG NO. 1404322 FOR GENERAL NOTES, VENTILATOR SCHEDULE AND WALL CRACK CONTROL JOINT DETAILS

FOR REVIEW ONLY NOT FOR USE IN CONSTRUCTION

METRIC CONVERSIONS		
¼" = 6MM	1'-3½" = 394MM	80'-0" = 24400MM
½" = 13MM	1'-5" = 432MM	
¾" = 19MM	1'-6" = 457MM	
1" = 25MM	2'-0" = 609MM	
2" = 51MM	2'-5" = 737MM	
4" = 102MM	3'-0" = 914MM	
6" = 152MM	5'-0" = 1520MM	
8" = 203MM	10'-0" = 3050MM	
10" = 254MM	12'-0" = 3660MM	
1'-0" = 305MM	15'-0" = 4570MM	
1'-2⅜" = 365MM	25'-0" = 7620MM	
1'-3" = 381MM		

GRAPHIC SCALES

1/4" = 1'-0" 4' 2' 0 4' 8'

3/4" = 1'-0" 12" 6" 0 1' 2' 3'

CHECK GRAPHIC SCALES BEFORE USING

HAYES, GRAY, MITTEN & WATTERS ARCHITECTS, ENGINEERS, PLANNERS ROANOKE, VIRGINIA	DEPARTMENT OF THE NAVY NAVAL FACILITIES ENGINEERING COMMAND 200 STOVALL STREET ALEXANDRIA, VA. 22332
DSGN DR CHK DATE	STANDARD EARTH-COVERED CONCRETE ARCH MAGAZINE
SUBMITTED BY DATE	STRUCTURAL FOUNDATION AND FLOOR PLAN AND SECTIONS MAGAZINE AT GRADE-LEVEL
NAVFAC SIZE F CODE IDENT. NO. 80091 NAVFAC DRAWING NO. 1404312	
SATISFACTORY TO DATE APPROVED DATE	CONTR. CONTR. NO.
COMPUTER GENERATED/REVISION	SCALE AS NOTED SPEC. SHEET 1 OF

AD S 46A .AU2082.91711

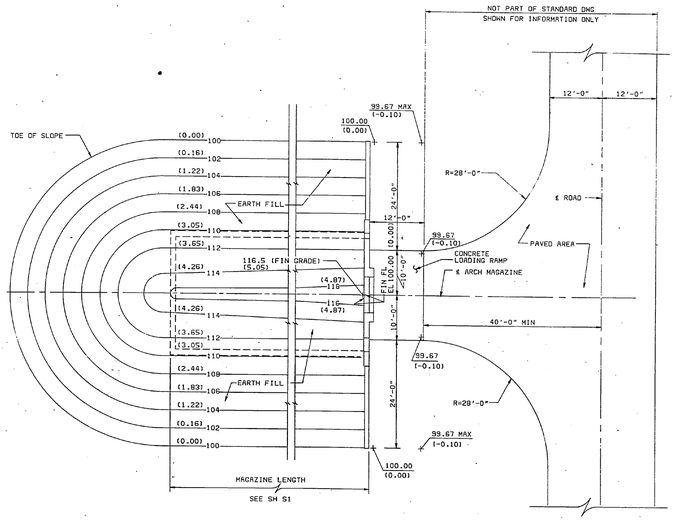

SITE PLAN
MAGAZINE AT GRADE-LEVEL
SCALE: 1/8" = 1'-0"
CONTOUR INTERVAL: 2'

NOTES:

1. SEE GEN NOTE 15, NAVFAC DWG NO. 1404322 FOR REF ELEVATION.
2. NUMBERS IN PARENTHESIS ARE METERS.
3. CONTOURS SHOWN REPRESENT TYPICAL CONDITIONS FOR SINGLE MAGAZINE. CONTOURS MAY REQUIRE ADJUSTMENT FOR SITING OF MULTIPLE MAGAZINES, OR WHERE SOIL OR DRAINAGE CONDITIONS SO INDICATE.

ABBREVIATIONS

AB	ANCHOR BOLT	LG	LARGE, LONG
ABT	ABOUT	LGTH	LENGTH
ACI	AMERICAN CONCRETE INSTITUTE	LLV	LONG LEG VERTICAL
ANR	ANCHOR	LTGS	LIGHTINGS
AMP	AMPERE	M	METERS
ASSY	ASSEMBLY	MACH	MACHINE
AWG	AMERICAN WIRE GAUGE	MAG	MAGAZINE
BKR	BREAKER	MAX	MAXIMUM
CJ	CONSTRUCTION JOINT	MET	METAL
℄	CENTERLINE	MIN	MINIMUM
CND	CONDUIT	MM	MILLIMETER
CLR	CLEAR	MS	MILLISECONDS
CM	CUBIC METERS	NAPEC	NAVAL AMMUNITION PRODUCTION ENGINEERING CENTER
CONC	CONCRETE	NAVFAC	NAVAL FACILITIES ENGINEERING COMMAND
CONST	CONSTRUCTION	NEMA	NATIONAL ELECTRICAL MANUFACTURERS ASSOCIATION
CONT	CONTINUOUS	NF	NEAR FACE
COORD	COORDINATE	NO	NUMBER
CTR	CENTER	OC	ON CENTER
CY	CUBIC YARDS	OPNG	OPENING
DET	DETAIL	OPP	OPPOSITE
DIA	DIAMETER	PCF	POUNDS PER CUBIC INCH
DIM	DIMENSION	PL	PLATE
DN	DOWN	PROJ	PROJECTION
DWG	DRAWING	PSF	POUNDS PER SQUARE FOOT
DWLS	DOWELS	PSI	POUNDS PER SQUARE INCH
EA	EACH	PVMT	PAVEMENT
EF	EACH FACE	R	RADIUS
EJ	EXPANSION JOINT	RCPTS	RECEPTACLES
EL	ELEVATION	REF	REFERENCE
ENCL	ENCLOSE, ENCLOSURE	REINF	REINFORCEMENT
EQ	EQUAL	REQD	REQUIRED
EQUIP,EQPT	EQUIPMENT	RHH	RUBBER HEAT AND WATER RESISTANT INSULATION
EW	EACH WAY	SECT	SECTION
EXPN	EXPANSION	SH	SHEET
F	FAHRENHEIT	SNT	SEALANT (JOINT SEALING MATERIAL)
FDN	FOUNDATION	SP	SPACE
FF	FAR FACE	SST	STAINLESS STEEL
FIN	FINISH	STD	STANDARD
FIXTS	FIXTURES	STIF	STIFFENER
FL	FLOOR	STL	STEEL
FTG	FOOTING	SYMM	SYMMETRICAL
G	GRAM	TAB	TOP AND BOTTOM
GALV	GALVANIZE	THD	THREADED
GEN	GENERAL	THH	THERMOPLASTIC HEAT AND WATER RESISTANT INSULATION
GFCI	GROUND FAULT CURRENT INTERRUPTOR	TOS	TOP OF STEEL
GND	GROUND	TYP	TYPICAL
GR	GRADE	UND	UNLESS NOTED OTHERWISE
HEX	HEXAGONAL	W	WITH
HP	HORSEPOWER	W/O	WITHOUT
HPT	HIGH POINT	WT	WEIGHT
IDS	INTRUSION DETECTION SYSTEM	WWF	WELDED WIRE FABRIC
JT	JOINT		
KG	KILOGRAM		
KSI	KIPS PER SQUARE INCH		
KW	KILOWATT		

METRIC CONVERSIONS REINFORCING BARS	
BAR SIZE	ø DIAMETER (MM)
#3	10
#4	13
#5	16
#6	19
#7	22
#8	25
#9	29

ø EXCLUDES DEFORMATIONS SEE STRUCTURAL DWGS FOR REINF BAR USE

METRIC CONVERSIONS STRUCTURAL STEEL SHAPES	
SHAPE DESIGNATION ON DRAWING	METRIC EQUIVALENT DEPTH (MM) X WT PER LENGTH (KG PER M)
C8 X 11.5	203 X 83.38
W8 X 13	203 X 94.26
C10 X 15.3	254 X 110.94
S10 X 25.4	254 X 184.17
W10 X 30	254 X 217.52

SEE STRUCTURAL DWGS FOR STRUCT STEEL USE

METRIC CONVERSIONS
1'-0" = 305MM
10'-0" = 3048MM
12'-0" = 3657MM
24'-0" = 7315MM
28'-0" = 8534MM
12'-0" = 3.65M
40'-0" = 12.20M

NUMBER INDICATES WALL SECTION OR ELEVATION
LETTER INDICATES BUILDING SECTION
SHEET NUMBER WHERE SECTION, DETAIL OR ELEVATION IS TAKEN
SHEET NUMBER WHERE SECTION, DETAIL OR ELEVATION IS DRAWN

GRAPHIC SCALES

1/8" = 1'-0" 8' 4' 0 8' 16'

FOR REVIEW ONLY NOT FOR USE IN CONSTRUCTION

CHECK GRAPHIC SCALES BEFORE USING

HAYES, GRAY, MITTEN & WATTERS ARCHITECTS, ENGINEERS, PLANNERS ROANOKE, VIRGINIA	DEPARTMENT OF THE NAVY NAVAL FACILITIES ENGINEERING COMMAND 200 STOVALL STREET ALEXANDRIA, VA. 22332
DSGN DR CHK DATE	STANDARD EARTH-COVERED CONCRETE ARCH MAGAZINE
SUBMITTED BY DATE	CIVIL SITE PLAN AND ABBREVIATIONS MAGAZINE AT GRADE-LEVEL
NAVFAC SIZE F CODE IDENT. NO. 80091 NAVFAC DRAWING NO. 1404310	
SATISFACTORY TO DATE APPROVED DATE	CONTR. CONTR. NO.
COMPUTER GENERATED/REVISION	SCALE AS NOTED SPEC. SHEET 2 OF

AD C 02F .AU1082.91711

REVISIONS			
LTR	DESCRIPTION	PREP'D BY	DATE APPROVED

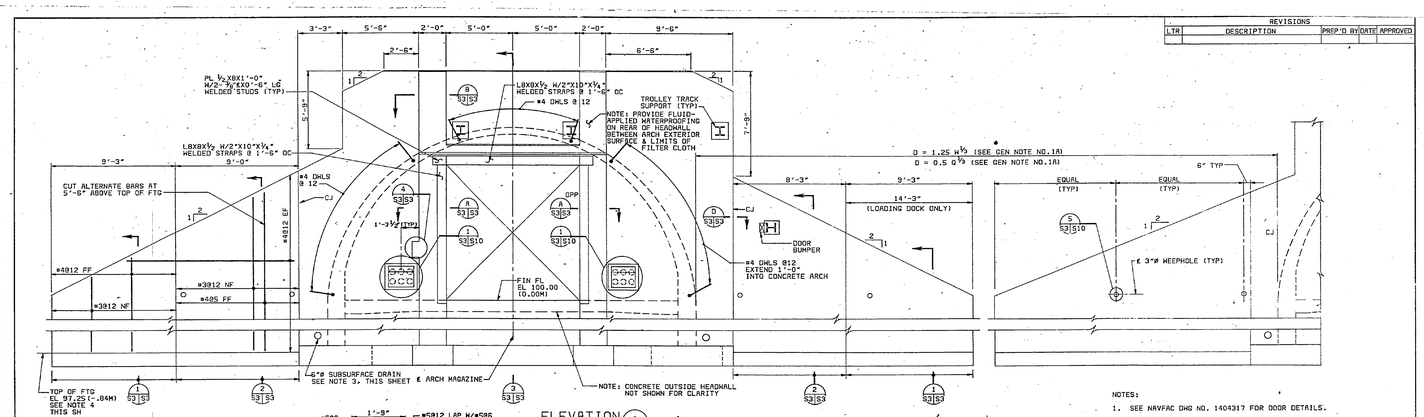

ELEVATION (1 / S3|S1A) SCALE: 3/8"=1'-0"

FRONT WALL ELEVATION
10'-0" WIDE DOOR OPENING

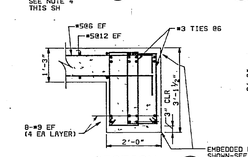

SECTION (A / S3|S3) SCALE: 3/4"=1'-0"

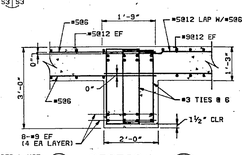

SECTION (B / S3|S3) SCALE: 3/4"=1'-0"

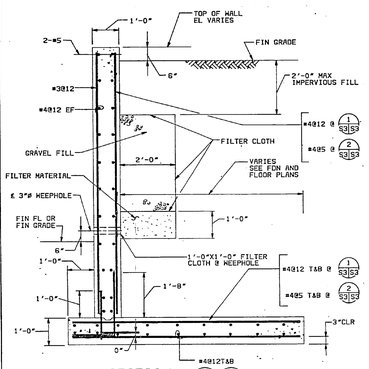

SECTION (1 / S3|S3 — 2 / S3|S3) SCALE: 3/4"=1'-0"

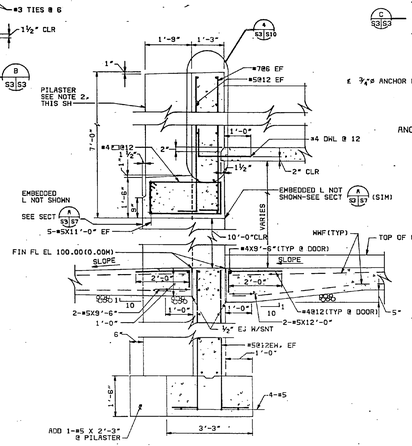

SECTION (3 / S3|S3) SCALE: 3/4"=1'-0"

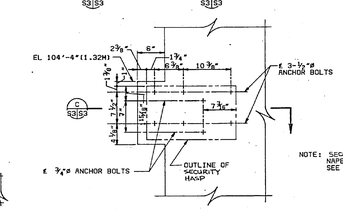

ANCHOR BOLT LAYOUT FOR SECURITY HASP

DETAIL (4 / S3|S3) SCALE: 1½"=1'-0"

NOTE: SECURITY HASP WILL BE FURNISHED BY NAFEC WITH INSTALLATION INSTRUCTIONS. CONTRACTOR INSTALL. SEE SH S5 FOR SECURITY HASP DETAILS.

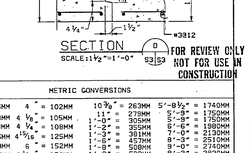

SECTION (C / S3|S3) SCALE: 3/4"=1'-0"

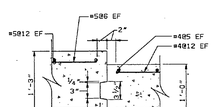

SECTION (D / S3|S3) SCALE: 1½"=1'-0"

NOTES:

1. SEE NAVFAC DWG NO. 1404317 FOR DOOR DETAILS.
2. PILASTER SHALL BE PLUMB. ALLOWABLE DEVIATION FROM VERTICAL SHALL NOT EXCEED ¼" PER 10 FEET VERTICAL HEIGHT.
3. 6"ø SUBSURFACE DRAIN PENETRATES HEADWALL FOR DRAINAGE TO FRONT OF MAGAZINE ONLY.
4. VERIFY FOOTING AND RETAINING WALL DESIGN IF FOOTINGS ARE LOWERED. SEE GEN NOTE 4. NAVFAC DWG NO. 1404322.
5. SEE NAVFAC DWG NO. 1404322 FOR WALL CRACK CONTROL JOINT DETAILS, AND GENERAL NOTES.

FOR REVIEW ONLY
NOT FOR USE IN CONSTRUCTION

METRIC CONVERSIONS					
¼" =	6MM	4" =	102MM	10⅜" =	263MM
½" =	13MM	4½" =	105MM	11" =	279MM
¾" =	19MM	4¾" =	108MM	1'-0" =	305MM
1" =	25MM	4 15/16" =	125MM	1'-3" =	381MM
1⅛" =	29MM	6" =	152MM	1'-6" =	457MM
1⅜" =	35MM	6 1/16" =	154MM	1'-8" =	508MM
1½" =	38MM	6⅜" =	162MM	1'-9" =	533MM
1¾" =	44MM	7" =	178MM	2'-0" =	609MM
1 15/16" =	49MM	7 3/16" =	182MM	2'-6" =	762MM
2" =	51MM	7½" =	190MM	3'-0" =	914MM
3" =	76MM	9" =	229MM	3'-1½" =	952MM
3½" =	89MM			3'-3" =	990MM
				5'-0" =	1520MM
				5'-6" =	1680MM
				5'-8½" =	1740MM
				5'-9" =	1750MM
				5'-9" =	1750MM
				6'-6" =	1980MM
				7'-0" =	2130MM
				8'-3" =	2510MM
				9'-0" =	2740MM
				9'-3" =	2820MM
				9'-6" =	2890MM
				10'-0" =	3050MM
				11'-0" =	3350MM
				11'-5" =	3480MM
				14'-3" =	4340MM

CHECK GRAPHIC SCALES BEFORE USING.

GRAPHIC SCALES

3/8" = 1'-0" 12"5"0 1' 2' 3' 4' 5' 6' 7'
3/4" = 1'-0" 12" 6" 0 1' 2' 3'
1-1/2" = 1'-0" 12" 8" 5" 3" 0 1'

NAVFAC, SEAY, WATTERS & MATTSON ARCHITECTS ENGINEERS PLANNERS NORFOLK, VIRGINIA	DEPARTMENT OF THE NAVY NAVAL FACILITIES ENGINEERING COMMAND 200 STOVALL STREET ALEXANDRIA, VA. 22332
DSGN CK / DR CHK / SUPV CK OVER	STANDARD EARTH-COVERED CONCRETE ARCH MAGAZINE
SUBMITTED BY DATE / TYPE NAME TITLE	FRONT WALL ELEVATION SECTIONS AND DETAILS 10'-0" WIDE DOOR OPENING
NORTHDIV ___ HC / DIV ___ DIR / SEC ___	SIZE F / CODE IDENT. NO. 80091 / NAVFAC DRAWING NO. 1404315
NAVFAC HQ ___ RVD / HQ ___ SIR	CONSTR. CONTR. NO.
SATISFACTORY TO DATE / APPROVED DATE / COMMAND SATISFACTION	SCALE AS NOTED / SPEC. / SHEET S3 OF

AD S 40C .AU2082.S1711

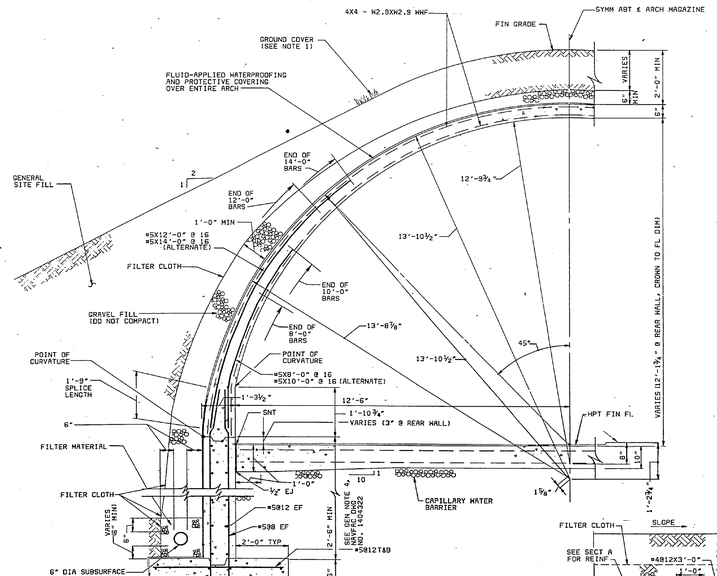

SECTION (A / S2|S1A) SCALE: 3/4"=1'-0"

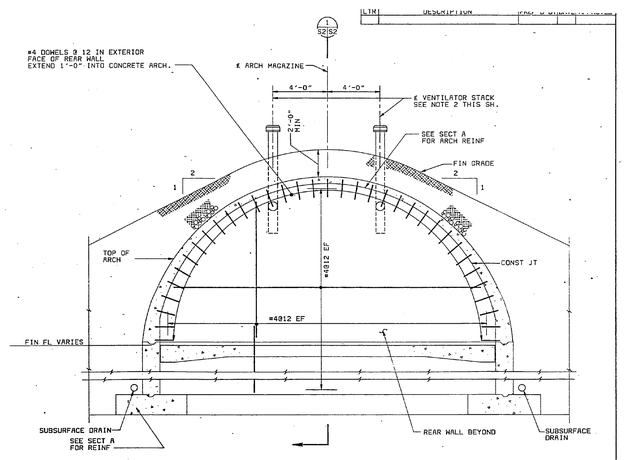

SECTION (B / S1|S2 — S1A) SCALE: 3/8"=1'-0"

REAR WALL ELEVATION

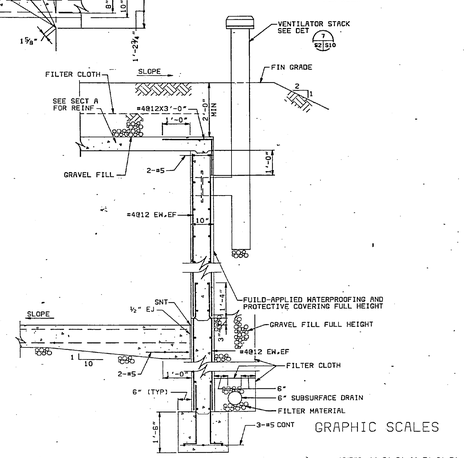

SECTION (1 / S2|S2) SCALE: 3/4"=1'-0"

NOTES:

1. GROUND COVER SHALL BE DETERMINED BY GENERAL SITE FILL MATERIAL AND CLIMATIC CONDITIONS. (GROUND COVER MUST BE MAINTAINED AT MAXIMUM 6" HEIGHT) WHEN GRAVEL FILL IS USED NO GROUND COVER IS REQUIRED.
2. IF ONE VENTILATOR STACK IS REQUIRED, LOCATE ON CENTER LINE OF ARCH MAGAZINE. SEE VENTILATOR SCHEDULE ON NAVFAC DWG NO. 1404222.
3. GENERAL SITE FILL SHALL BE COMPACTED TO AT LEAST 95% OF THE MAXIMUM DRY DENSITY AS DETERMINED BY ASTM D698, EXCEPT THE FILL DIRECTLY ABOVE THE CONCRETE ARCH, WHICH SHALL BE COMPACTED TO 90% OF THE MAXIMUM DRY DENSITY.

FOR REVIEW ONLY
NOT FOR USE IN CONSTRUCTION

METRIC CONVERSIONS					
½" =	13MM	1'-6" =	457MM	12'-1¾" =	3700MM
1 9/16" =	41MM	1'-9" =	533MM	12'-6" =	3800MM
2" =	51MM	1'-10¾" =	577MM	12'-9¾" =	3900MM
3" =	76MM	2'-0" =	609MM	13'-8⅞" =	4180MM
6" =	152MM	2'-6" =	761MM	13'-10½" =	4210MM
8" =	203MM	3'-0" =	914MM	14'-0" =	4260MM
10" =	254MM	4'-0" =	1220MM		
1'-0" =	305MM	5'-3" =	1560MM		
1'-1" =	330MM	8'-0" =	2440MM		
1'-2¾" =	374MM	10'-0" =	3050MM		
1'-3½" =	393MM	12'-0" =	3660MM		
1'-4" =	406MM				

CHECK GRAPHIC SCALES BEFORE USING.

GRAPHIC SCALES

3/8" = 1'-0" 12"5"0 1' 2' 3' 4' 5' 6' 7'
3/4" = 1'-0" 12" 6" 0 1' 2' 3'

NAVFAC, SEAY, WATTERS & MATTSON ARCHITECTS ENGINEERS PLANNERS NORFOLK, VIRGINIA	DEPARTMENT OF THE NAVY NAVAL FACILITIES ENGINEERING COMMAND 200 STOVALL STREET ALEXANDRIA, VA. 22332
DSGN CK / DR CHK / SUPV CK OVER	STANDARD EARTH-COVERED CONCRETE ARCH MAGAZINE
SUBMITTED BY DATE / TYPE NAME TITLE	STRUCTURAL ARCH SECTION AND MISCELLANEOUS DETAILS
NORTHDIV ___ HC / DIV ___ DIR / SEC ___	SIZE F / CODE IDENT. NO. 80091 / NAVFAC DRAWING NO. 1404314
NAVFAC HQ ___ RVD / HQ ___ SIR	CONSTR. CONTR. NO.
SATISFACTORY TO DATE / APPROVED DATE / COMMAND SATISFACTION	SCALE AS NOTED / SPEC. / SHEET S2 OF

AD S 10C .AU2082.S1711

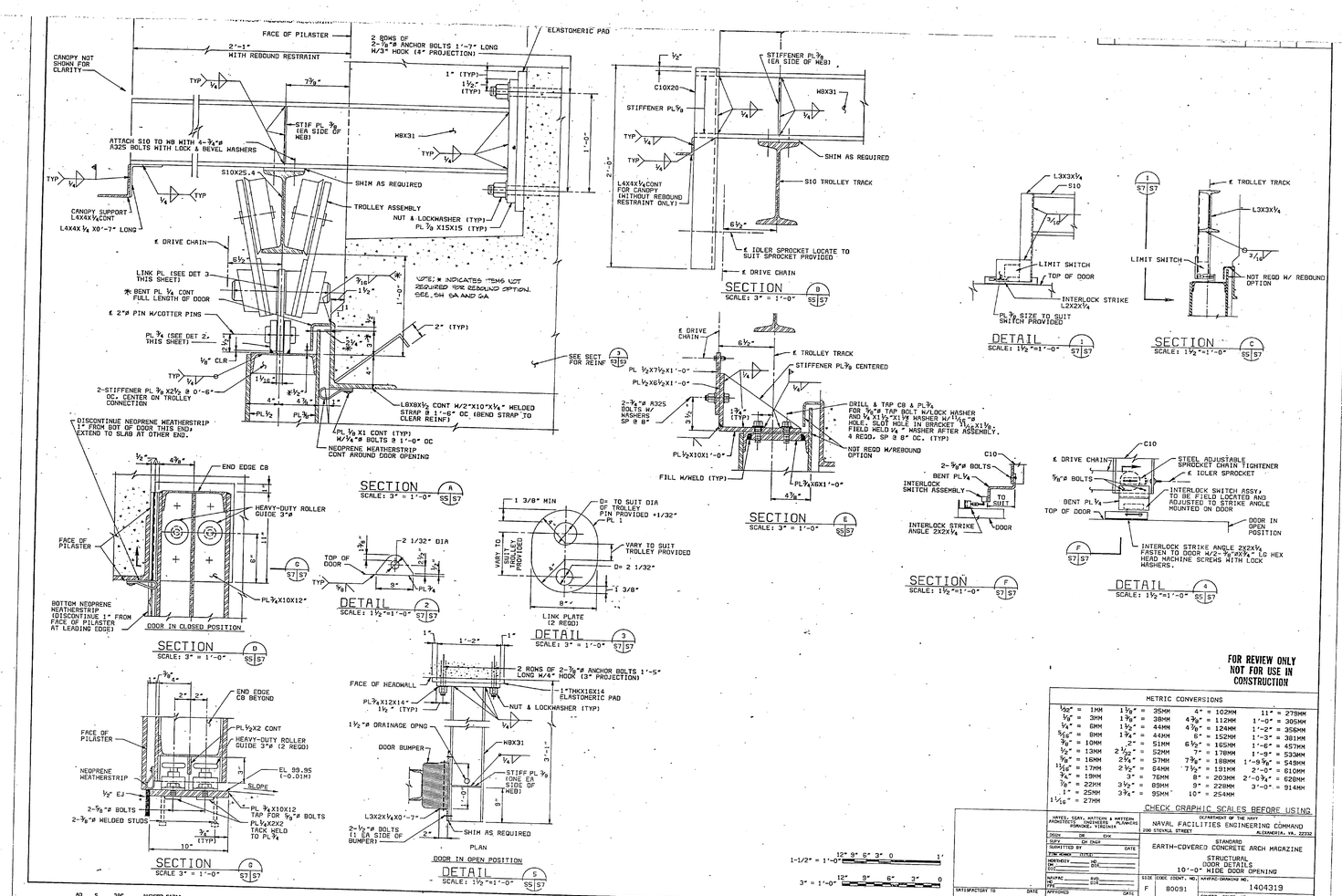

FOR REVIEW ONLY
NOT FOR USE IN CONSTRUCTION

METRIC CONVERSIONS

1/32" =	1MM	1 1/8" =	35MM	4" = 102MM	11" = 279MM
1/8" =	3MM	1 3/8" =	38MM	4 3/8" = 112MM	1'-0" = 305MM
1/4" =	6MM	1 3/4" =	44MM	4 7/8" = 124MM	1'-2" = 356MM
5/16" =	8MM	1 3/4" =	44MM	6" = 152MM	1'-3" = 381MM
3/8" =	10MM	2" =	51MM	6 1/2" = 165MM	1'-6" = 457MM
1/2" =	13MM	2 1/16" =	52MM	7" = 178MM	1'-9" = 533MM
5/8" =	16MM	2 1/4" =	57MM	7 3/8" = 188MM	1'-9 3/8" = 548MM
11/16" =	17MM	2 1/2" =	64MM	7 1/2" = 191MM	2'-0" = 610MM
3/4" =	19MM	3" =	76MM	8" = 203MM	2'-0 3/4" = 626MM
7/8" =	22MM	3 1/2" =	89MM	9" = 228MM	3'-0" = 914MM
1" =	25MM	3 3/4" =	95MM	10" = 254MM	
1 1/16" =	27MM				

CHECK GRAPHIC SCALES BEFORE USING

HAYES, SEAY, MATTERN & MATTERN, ARCHITECTS & PLANNERS, ROANOKE, VIRGINIA	DEPARTMENT OF THE NAVY NAVAL FACILITIES ENGINEERING COMMAND 200 STOVALL STREET ALEXANDRIA, VA. 22332
DESIGN DR CHK	STANDARD EARTH-COVERED CONCRETE ARCH MAGAZINE
SUPT CH ENGR	STRUCTURAL DOOR DETAILS 10'-0" WIDE DOOR OPENING
SUBMITTED BY DATE	
SUBMITTED TITLE	
NORFOLK	
NAVFAC	
APPROVED DATE	SIZE F · IDENT. NO. 80091 · NAVFAC DRAWING NO. 1404319
	CONTR. CONTR. NO.
DATE SATISFACTORY TO	SCALE AS NOTED · SPEC. · SHEET 57 OF

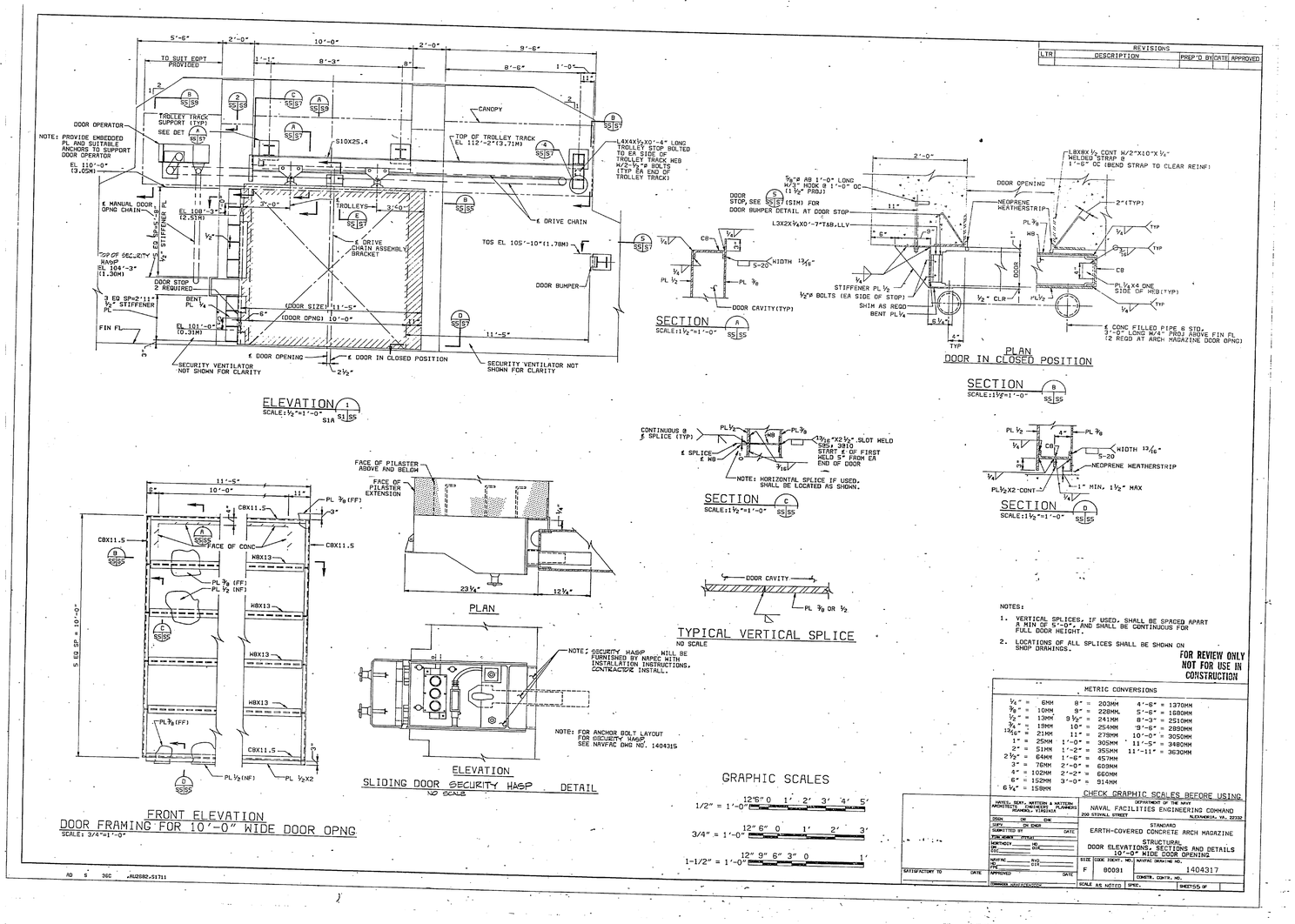

NOTES:

1. VERTICAL SPLICES, IF USED, SHALL BE SPACED APART A MIN OF 5'-0", AND SHALL BE CONTINUOUS FOR FULL DOOR HEIGHT.
2. LOCATIONS OF ALL SPLICES SHALL BE SHOWN ON SHOP DRAWINGS.

FOR REVIEW ONLY
NOT FOR USE IN CONSTRUCTION

METRIC CONVERSIONS

1/4" =	6MM	8" =	203MM	4'-6" =	1370MM
3/8" =	10MM	9" =	228MM	5'-6" =	1680MM
1/2" =	13MM	9 1/2" =	241MM	8'-3" =	2510MM
3/4" =	19MM	10" =	254MM	9'-6" =	2890MM
13/16" =	21MM	11" =	279MM	10'-0" =	3050MM
1" =	25MM	1'-0" =	305MM	11'-5" =	3480MM
2" =	51MM	1'-2" =	355MM	11'-11" =	3630MM
2 1/2" =	64MM	1'-6" =	457MM		
3" =	76MM	2'-0" =	609MM		
4" =	102MM	2'-2" =	660MM		
6" =	152MM	3'-0" =	914MM		
6 1/4" =	159MM				

CHECK GRAPHIC SCALES BEFORE USING

HAYES, SEAY, MATTERN & MATTERN, ARCHITECTS & PLANNERS, ROANOKE, VIRGINIA	DEPARTMENT OF THE NAVY NAVAL FACILITIES ENGINEERING COMMAND 200 STOVALL STREET ALEXANDRIA, VA. 22332
DESIGN DR CHK	STANDARD EARTH-COVERED CONCRETE ARCH MAGAZINE
SUPT CH ENGR	STRUCTURAL DOOR ELEVATIONS, SECTIONS AND DETAILS 10'-0" WIDE DOOR OPENING
SUBMITTED BY DATE	
SUBMITTED TITLE	
NORFOLK	
NAVFAC	
APPROVED DATE	SIZE F · IDENT. NO. 80091 · NAVFAC DRAWING NO. 1404317
	CONTR. CONTR. NO.
DATE SATISFACTORY TO	SCALE AS NOTED · SPEC. · SHEET 55 OF

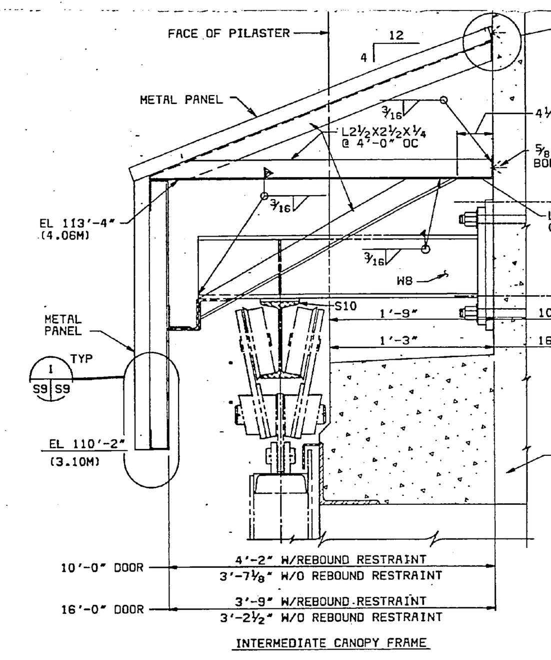

SECTION A
SCALE: 1½"=1'-0" S5 S9 S6

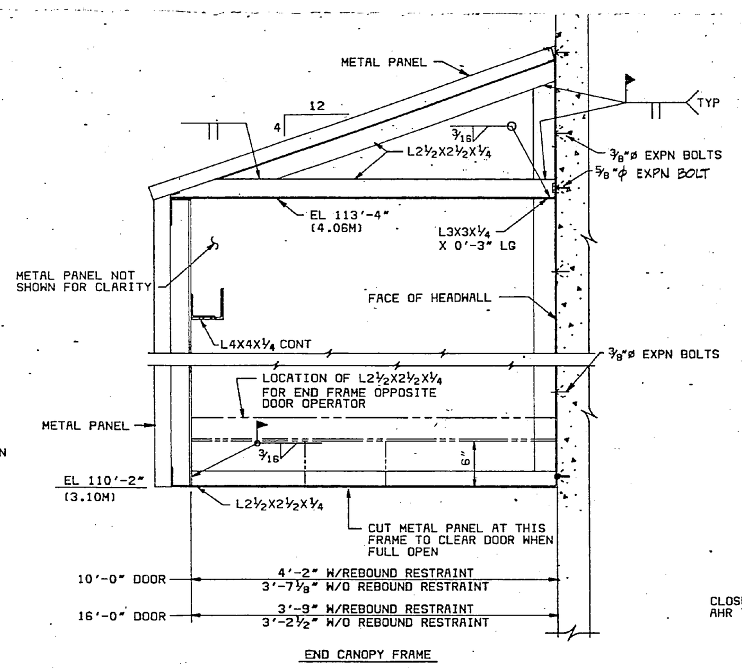

SECTION B
SCALE: 1½"=1'-0" S5 S9 S6

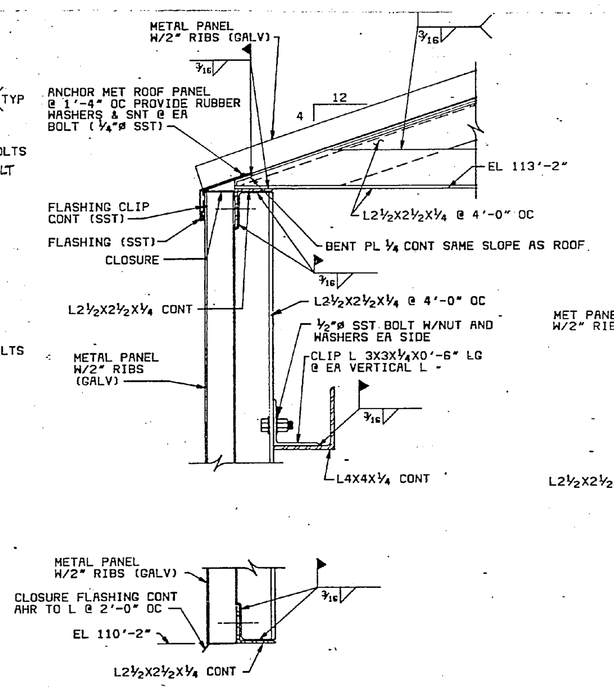

DETAIL 1
SCALE: 3"=1'-0" S9 S9

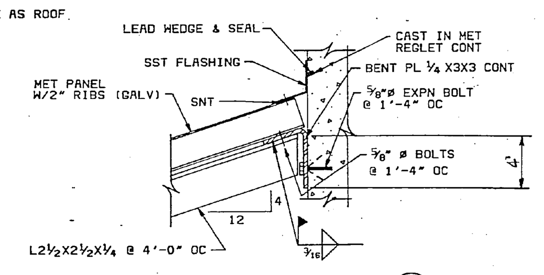

DETAIL 2
SCALE: 3"=1'-0" S9 S9 S5,S6

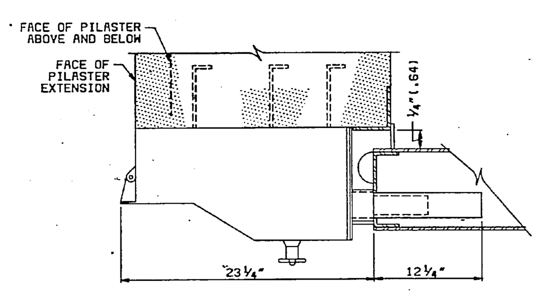

PLAN

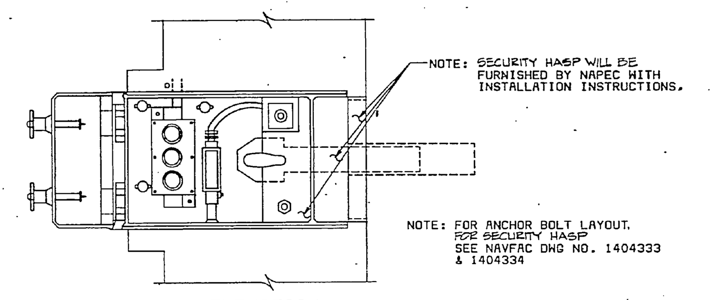

ELEVATION

SLIDING DOOR SECURITY HASP DETAIL
NO SCALE

FOR REVIEW ONLY
NOT FOR USE IN
CONSTRUCTION

METRIC CONVERSIONS	
¼" = 6MM	1'-4" = 407MM
⅜" = 10MM	2'-0" = 610MM
½" = 13MM	3'-2" = 965MM
⅝" = 16MM	3'-6⅝" = 1082MM
1½" = 38MM	3'-9⅝" = 1158MM
2" = 51MM	4'-0" = 1200MM
2½" = 64MM	4'-0¾" = 1219MM
3" = 76MM	4'-1¾" = 1244MM
4" = 102MM	10'-0" = 3050MM
4½" = 115MM	16'-0" = 4875MM
6" = 152MM	
1'-0" = 305MM	

CHECK GRAPHIC SCALES BEFORE USING

GRAPHIC SCALES
1-1/2" = 1'-0" 12" 9" 6" 3" 0 1'
3" = 1'-0" 12" 9" 6" 3" 0

HAYES, SEAY, MATTERN & MATTERN ARCHITECTS ENGINEERS PLANNERS ROANOKE, VIRGINIA
DEPARTMENT OF THE NAVY
NAVAL FACILITIES ENGINEERING COMMAND
200 STOVALL STREET ALEXANDRIA, VA. 22332
DSGN DR CHK
SUPV CH ENGR
SUBMITTED BY DATE
NORTHDIV DH DIC
NAVFAC HD FPE
APPROVED DATE
SATISFACTORY TO DATE
COMMANDER NAVFACENGCOM
STANDARD
EARTH-COVERED CONCRETE ARCH MAGAZINE
STRUCTURAL
CANOPY DETAILS AND MISCELLANEOUS SECTIONS
SIZE F | CODE IDENT. NO. 80091 | NAVFAC DRAWING NO. 1404321
CONSTR. CONTR. NO.
SCALE AS NOTED | SPEC. | SHEET S9 OF

AD S 39C .AU2682.S1711

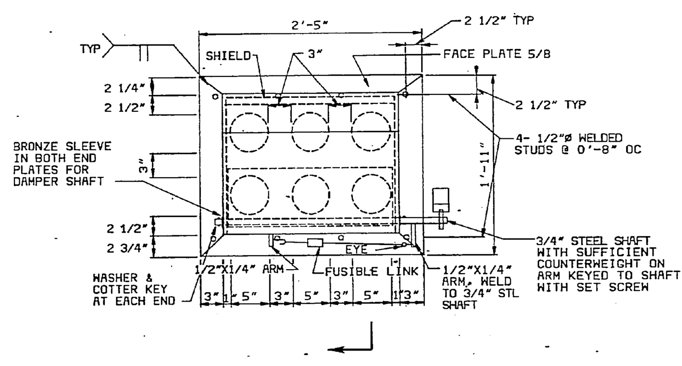

SECURITY VENT
DETAIL 1
SCALE: 1 1/2"= 1'-0" S3 S10 S4

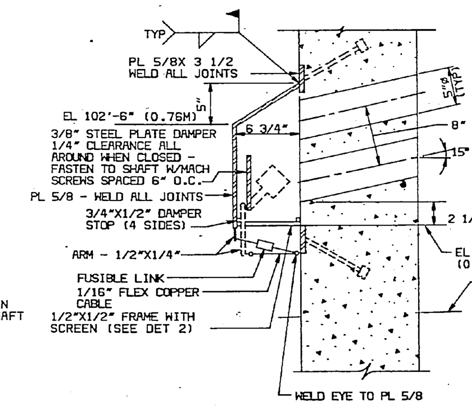

SECTION A
SCALE: 1 1/2"=1'-0" S10 S10

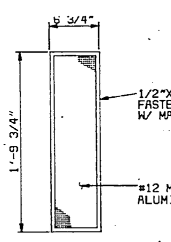

DETAIL 2
SCALE: 1 1/2"=1'-0" S10 S10

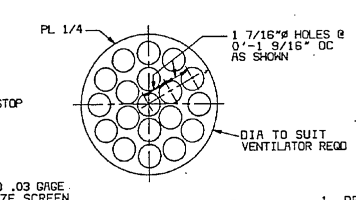

DETAIL 3
SCALE: 3"= 1'-0" S10 S10

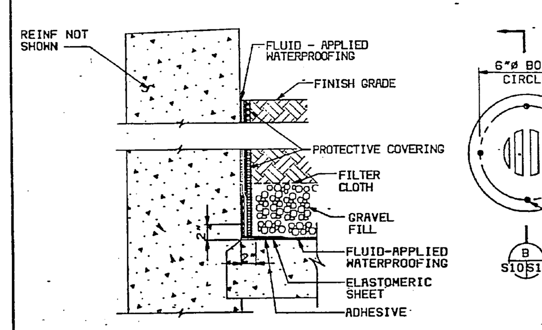

DETAIL 4
SCALE: 1½" = 1'-0 S3 S10 S4

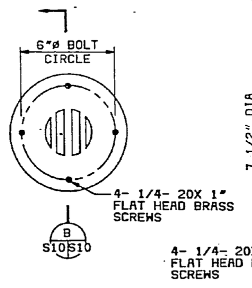

DETAIL 5
NO SCALE S3 S10 S4

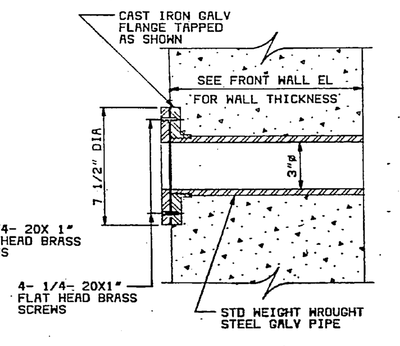

SECTION B
NO SCALE S10 S10

* (PIPE SLEEVE DIA SAME AS STACK DIA-SEE VENTILATION SCHEDULE)

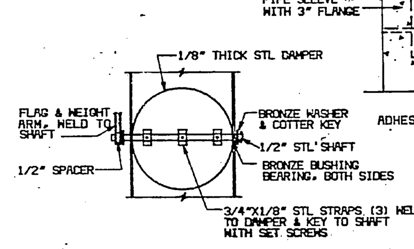

FIRE DAMPER
DETAIL 6
SCALE: 1 1/2"=1'-0" S10 S10

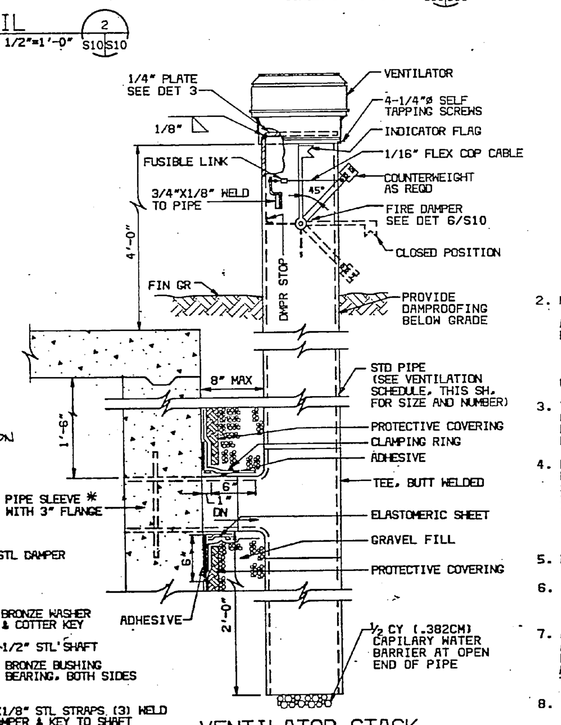

VENTILATOR STACK
DETAIL 7
SCALE: 1 1/2"= 1'-0" S2 S10

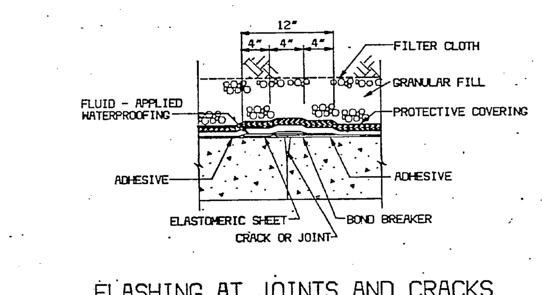

FLASHING AT JOINTS AND CRACKS IN THE CONCRETE (LESS THAN 1/4" WIDE)
NO SCALE

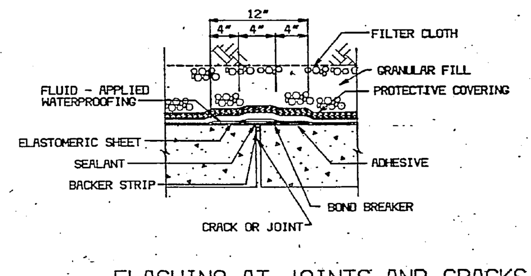

FLASHING AT JOINTS AND CRACKS IN THE CONCRETE (1/4" WIDE OR WIDER)
NO SCALE

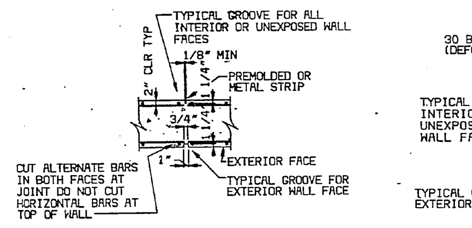

CONTROL JOINT

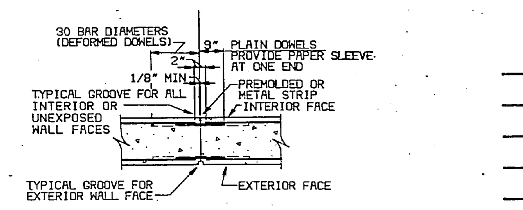

VERTICAL CONSTRUCTION JOINT

CONCRETE WALL JOINT DETAILS
NO SCALE

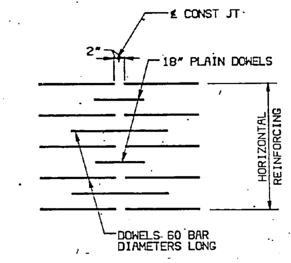

ELEVATION SHOWING PLACING OF DOWELS

VENTILATION SCHEDULE			
OUTSIDE DESIGN TEMPERATURE		LENGTH OF MAGAZINE	
		50' TO 80'	LESS THAN 50'
ABOVE 90°F (32°C)	STACK	10"ø- 2 EA	8"ø- 2 EA
30°F(-1°C) TO 90°F	STACK	8"ø- 2 EA	10"ø- 1 EA
BELOW 30°F (-1°C)	STACK	10"ø- 1 EA	8"ø- 1 EA

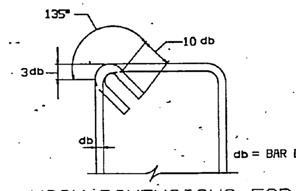

HOOK DIMENSIONS FOR CLOSED TIES & STIRRUPS
NO SCALE

TABLE- I
MINIMUM SPLICE LENGTH *

BAR SIZE	MINIMUM SPLICE LENGTH ** (INCHES)
#3	15 (381MM)
#4	21 (533MM)
#5	26 (660MM)
#6	31 (787MM)
#7	39 (991MM)
#8	51 (1295MM)
#9	65 (1651MM)

* FOR BARS SPACED 6" OR MORE, MULIPLY TABLE VALUES BY .8 EXCEPT NO SPLICE LENGTH SHALL BE LESS THAN 12".

** FOR HORIZONTAL BARS IN THE HEADER BEAM, MULTIPLY THE TABULATED VALUES BY 1.4. (SEE SECT 3/S3 AND SECT 3/S4)

GRAPHIC SCALES
3" = 1'-0" 12" 9" 6" 3" 0
1-1/2" = 1'-0" 12" 9" 6" 3" 0 1'

GENERAL NOTES

1. DESIGN LOADS
   A. BLAST LOAD: BASED ON INTERMAGAZINE SEPARATION DISTANCES D FOR A QUANTITY OF HIGH EXPLOSIVE W EQUAL TO 500,000 POUNDS (Q=227,000 KG) EQUIVALENT TNT, AS FOLLOWS:
      (1) SIDE-TO-SIDE D = 1.25W⅓ (U.S. UNITS) D = 0.5Q⅓ (METRIC UNITS)
      (2) FRONT-TO-REAR D = 2.0W⅓ (U.S. UNITS) D = 0.8Q⅓ (METRIC UNITS)
   B.

STRUCTURAL ELEMENT	DESIGN BLAST OVERPRESSURE	TIME DURATION	FAILURE CRITERIA DUCTILITY RATIO	MAXIMUM SUPPORT ROTATION
BLAST DOOR	158 PSI	20 MS	15	10°
HEADWALL	158 PSI	20 MS	--	12°

   C. ROOF LIVE LOAD (MAINTENANCE EQUIPMENT) 100 PSF
   D. ROOF DEAD LOAD (2 FT MIN EARTH FILL) VARIES
   E. FLOOR LIVE LOAD 2000 PSF
   F. LOADING RAMP OR LOADING DOCK LIVE LOAD 1000 PSF
   G. SEISMIC DATA ZONE 4
   H. ASSUMED ALLOWABLE SOIL BEARING 4000 PSF
   I. ASSUMED DYNAMIC RESPONSE (SOIL BEARING) 2.5
   J. ASSUMED LATERAL SOIL PRESSURE COEFFICIENT 0.33
   K. ASSUMED COEFFICIENT OF FRICTION (CONC ON SOIL) 0.50
   L. ASSUMED SUBGRADE MODULUS 200 PCI
2. MATERIAL STRENGTHS
   A. CONCRETE 28-DAY COMPRESSIVE STRENGTH (UNO) f'_c = 4000 PSI
   B. REINFORCING STEEL
      STIRRUPS AND TIES F_y = 40 KSI MIN
      ALL OTHER F_y = 60 KSI
      WELDED WIRE FABRIC F_y = 60 KSI MIN
   C. STRUCTURAL STEEL SHAPES & PLATES F_y = 36 KSI
3. THIS STRUCTURE IS DESIGNED IN ACCORDANCE WITH THE STRENGTH DESIGN METHOD OF BUILDING CODE REQUIREMENTS FOR REINFORCED CONCRETE (ACI 318) AND THE PROCEDURES AND REQUIREMENTS OF NAVFAC P-397, "STRUCTURES TO RESIST THE EFFECTS OF ACCIDENTAL EXPLOSIONS."
4. ELEVATION OF BOTTOM OF FTG SHALL BE ESTABLISHED BELOW THE DEPTH OF FROST PENETRATION. FOOTING SHALL BE LOWERED AS REQUIRED TO OBTAIN SUITABLE BEARING. ALL UNSUITABLE FOUNDATION MATERIAL SHALL BE REMOVED WITH FOOTINGS RESTING ON UNDISTURBED SOIL WITH A MINIMUM BEARING CAPACITY OF 4000 PSF. UNLESS OTHERWISE SHOWN OR INDICATED. IF AN ALLOWABLE SOIL BEARING OTHER THAN 4000 PSF IS ASSUMED, THEN FOOTINGS MUST BE REDESIGNED.
5. NOT USED.
6. FABRICATION AND ERECTION OF STRUCTURAL STEEL SHALL CONFORM TO THE "SPECIFICATION FOR THE DESIGN, FABRICATION, AND ERECTION OF STRUCTURAL STEEL FOR BUILDINGS, NOVEMBER, 1978."
7. ALL REINFORCEMENT SHALL BE DETAILED, FABRICATED, AND PLACED IN ACCORDANCE WITH ACI 315-80, UNLESS OTHERWISE SHOWN. MINIMUM SPLICE LENGTHS SHALL BE AS SHOWN IN TABLE- 1, THIS SH, UNLESS OTHERWISE INDICATED. ALL HOOKS ARE 90° STANDARD HOOKS, UNLESS NOTED OTHERWISE. PROVIDE DOWELS TO MATCH REINF IN WALLS.
8. UNLESS OTHERWISE SHOWN, REINFORCEMENT AT WALL CORNERS AND INTERSECTIONS SHALL BE IN ACCORDANCE WITH DETAILS SHOWN IN ACI 315-80 AND LAP SPLICES SHALL BE CLASS C.
9. UNLESS OTHERWISE SHOWN, PROVIDE CONCRETE PROTECTION FOR ALL REINFORCING IN ACCORDANCE WITH THE BUILDING CODE REQUIREMENTS FOR REINFORCED CONCRETE (ACI 318-77).
10. UNLESS OTHERWISE SHOWN, FLOOR SLAB ON GRADE SHALL BE 10 INCHES THICK AND SHALL BE REINFORCED WITH TWO LAYERS OF 6X6-W4XW4 WELDED WIRE FABRIC. A POLYETHYLENE VAPOR BARRIER AND 4" GRANULAR MATERIAL SHALL BE PLACED BENEATH ALL SLABS ON GRADE.
11. PROVIDE ADEQUATE INSPECTION PANELS IN WALL FORMING TO FACILITATE CONCRETE PLACEMENT, TO INSURE THAT NO VOIDS OCCUR, AND THAT ADEQUATE COMPACTION IS ATTAINED.
12. CONTINUOUS REINFORCING IN WALLS AND FOOTINGS MAY BE SPLICED, AS REQUIRED, PROVIDING BARS ARE OF THE LONGEST PRACTICABLE LENGTH AND SPLICES ARE SHOWN ON THE REINFORCING SHOP DRAWINGS. SEE TABLE-1, THIS SH.
13. SUBSURFACE DRAIN TO BE SITE ADAPTED TO DRAIN TO FRONT OR REAR OF MAGAZINE.
14. PROVIDE CRACK CONTROL JOINTS IN SLAB ON GRADE AT 25'-0" ON CENTER UNLESS OTHERWISE SHOWN.
15. ALL DRAWINGS ARE REFERENCED TO A FINISHED FLOOR ELEVATION 100'-0". FOR TRUE SITE ELEVATION, SEE GRADING AND DRAINAGE PLANS.

METRIC CONVERSIONS		
1/16" = 2MM	3" = 76MM	1'-11" = 584MM
⅛" = 3MM	4" = 102MM	2'-0" = 610MM
¼" = 6MM	5" = 127MM	2'-5" = 737MM
⅜" = 10MM	6" = 152MM	4'-0" = 1200MM
¾" = 19MM	6½" = 165MM	
1" = 25MM	6¾" = 171MM	
1¼" = 32MM	8" = 203MM	
1½" = 38MM	9" = 228MM	
2" = 51MM	10" = 254MM	
2¼" = 57MM	1'-0" = 305MM	
2½" = 64MM	1'-6" = 457MM	
2¾" = 70MM		

FOR REVIEW ONLY
NOT FOR USE IN
CONSTRUCTION

CHECK GRAPHIC SCALES BEFORE USING

HAYES, SEAY, MATTERN & MATTERN ARCHITECTS ENGINEERS PLANNERS ROANOKE, VIRGINIA
DEPARTMENT OF THE NAVY
NAVAL FACILITIES ENGINEERING COMMAND
200 STOVALL STREET ALEXANDRIA, VA. 22332
DSGN DR CHK
SUPV CH ENGR
SUBMITTED BY DATE
NORTHDIV DH DIC
NAVFAC HD FPE
APPROVED DATE
SATISFACTORY TO DATE
COMMANDER NAVFACENGCOM
STANDARD
EARTH-COVERED CONCRETE ARCH MAGAZINE
STRUCTURAL
VENTILATORS, MISCELLANEOUS DETAILS AND GENERAL NOTES
SIZE F | CODE IDENT. NO. 80091 | NAVFAC DRAWING NO. 1404322
CONSTR. CONTR. NO.
SCALE AS NOTED | SPEC. | SHEET S10 OF

AD S 45B .AU2682.S1711

REVISIONS				
LTR	DESCRIPTION	PREP'D BY	DATE	APPROVED

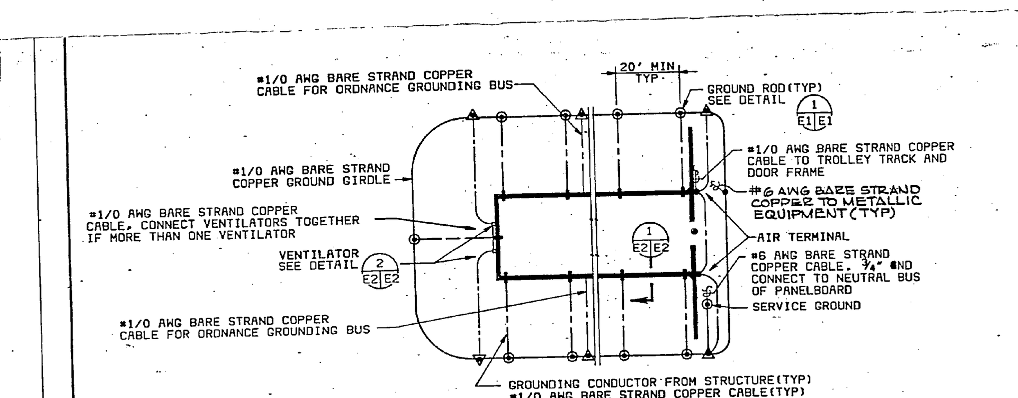

TYPICAL GROUNDING PLAN
SCALE: 1" = 20'-0"

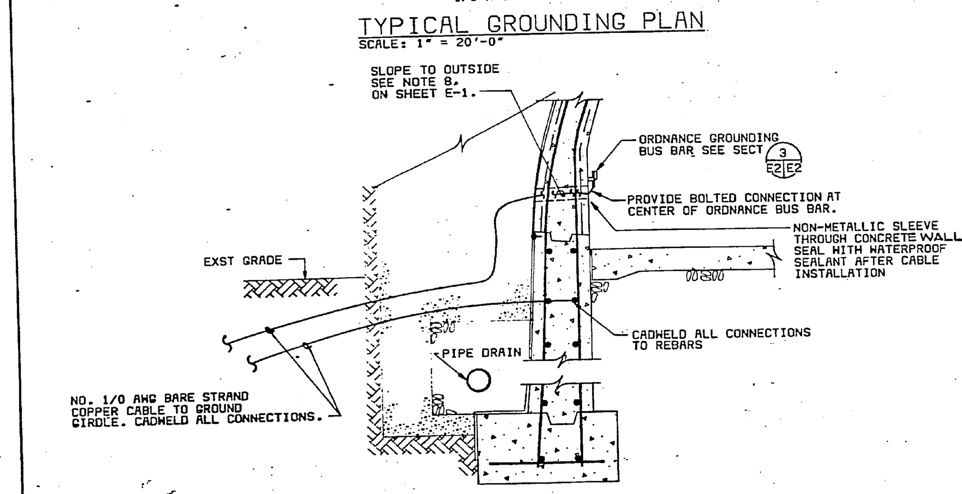

SECTION 1 E2 E2
NO SCALE

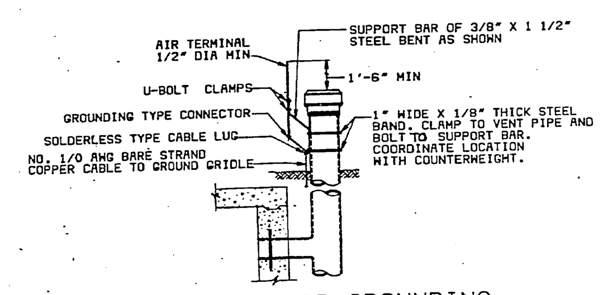

VENTILATOR GROUNDING DETAIL 2 E2 E2
NO SCALE

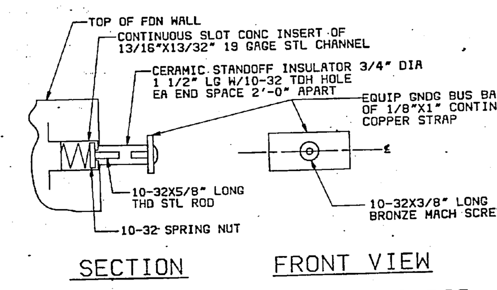

EQUIPMENT GROUNDING BUS BAR

DETAIL 3 E1 E2
NO SCALE

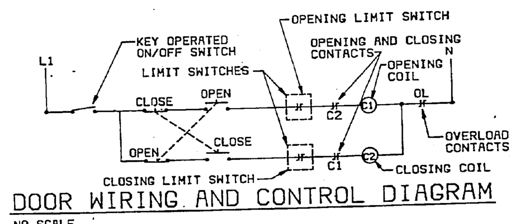

DOOR WIRING AND CONTROL DIAGRAM
NO SCALE

ELECTRICAL LOAD SCHEDULE													
ARCH TYPE	MAGAZINE SIZE		EXTERIOR				INTERIOR				MOTOR		PANEL TOTAL
	WIDTH (FT)	LENGTH (FT)	LGT FIX QTY	WATTS	RECP QTY	WATTS	LTG FIX QTY	WATTS	RECP QTY	WATTS	QTY	SIZE	(1 MAG) (KW) *
1	25	80	2	200	1	900	10	200	0		1	2 HP 2880	6.2
2	25	50	2	200	1	900	5	200	0		1	2 HP 2880	5.2

* CONNECTED LOAD

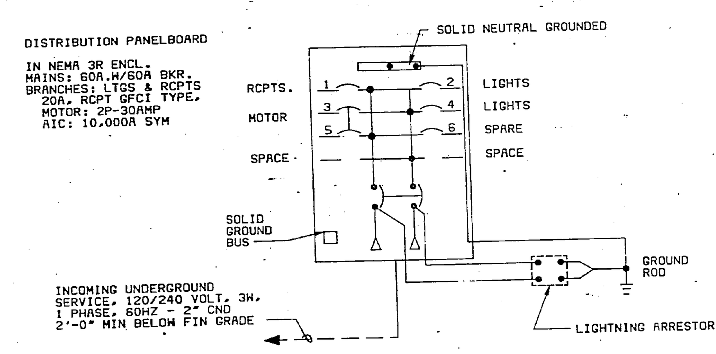

ELECTRICAL SERVICE SINGLE LINE DIAGRAM
NO SCALE

LIGHTING FIXTURE SCHEDULE		
TYPE		SIZE
A	EXPLOSION PROOF INCANDESCENT CEILING MOUNTED ASSEMBLY WITH CLEAR LAMP, GLOBE, GUARD AND DOME REFLECTOR SUITABLE FOR HAZARDOUS LOCATION CLASS I, DIV II, GROUP D AND CLASS II, DIV II, GROUP G	200W
B	VAPOR TIGHT INCANDESCENT WALL MOUNTED FIXTURE, ENCLOSED AND GASKETED, WITH CLEAR LAMP, GLOBE, GUARD AND 30° ANGLE REFLECTOR - TO BE OPERATED BY PHOTO-CELL MOUNTED ABOVE FIXTURE.	200W

FOR REVIEW ONLY NOT FOR USE IN CONSTRUCTION

METRIC CONVERSIONS

1/4" = 6.4MM
3/8" = 9.5MM
1/2" = 13MM
3/4" = 19.1MM
1 1/2" = 38.1MM
12" = 305MM
1'-6" = 457MM
2'-0" = 610MM
20'-0" = 6100MM

GRAPHIC SCALES
1"=20' 20' 10' 0 10' 20' 30' 40'

CHECK GRAPHIC SCALES BEFORE USING

HAYES, SEAY, MATTERN & MATTERN ARCHITECTS ENGINEERS PLANNERS ROANOKE, VIRGINIA

DEPARTMENT OF THE NAVY
NAVAL FACILITIES ENGINEERING COMMAND
200 STOVALL STREET ALEXANDRIA, VA. 22332

STANDARD
EARTH-COVERED CONCRETE ARCH MAGAZINE

ELECTRICAL
SCHEDULES AND SINGLE LINE DIAGRAM

DSGN DR CHK
SUPV CH ENGR
SUBMITTED BY DATE
NORTHDIV HD DIR
NAVFAC RVD DIR
APPROVED DATE
SATISFACTORY TO DATE

SIZE F | CODE IDENT. NO. 80091 | NAVFAC DRAWING NO. 1404324
CONSTR. CONTR. NO.
SCALE AS NOTED | SPEC. | SHEET E2 OF

AD E 02E .AU2782.E1711

REVISIONS				
LTR	DESCRIPTION	PREP'D BY	DATE	APPROVED

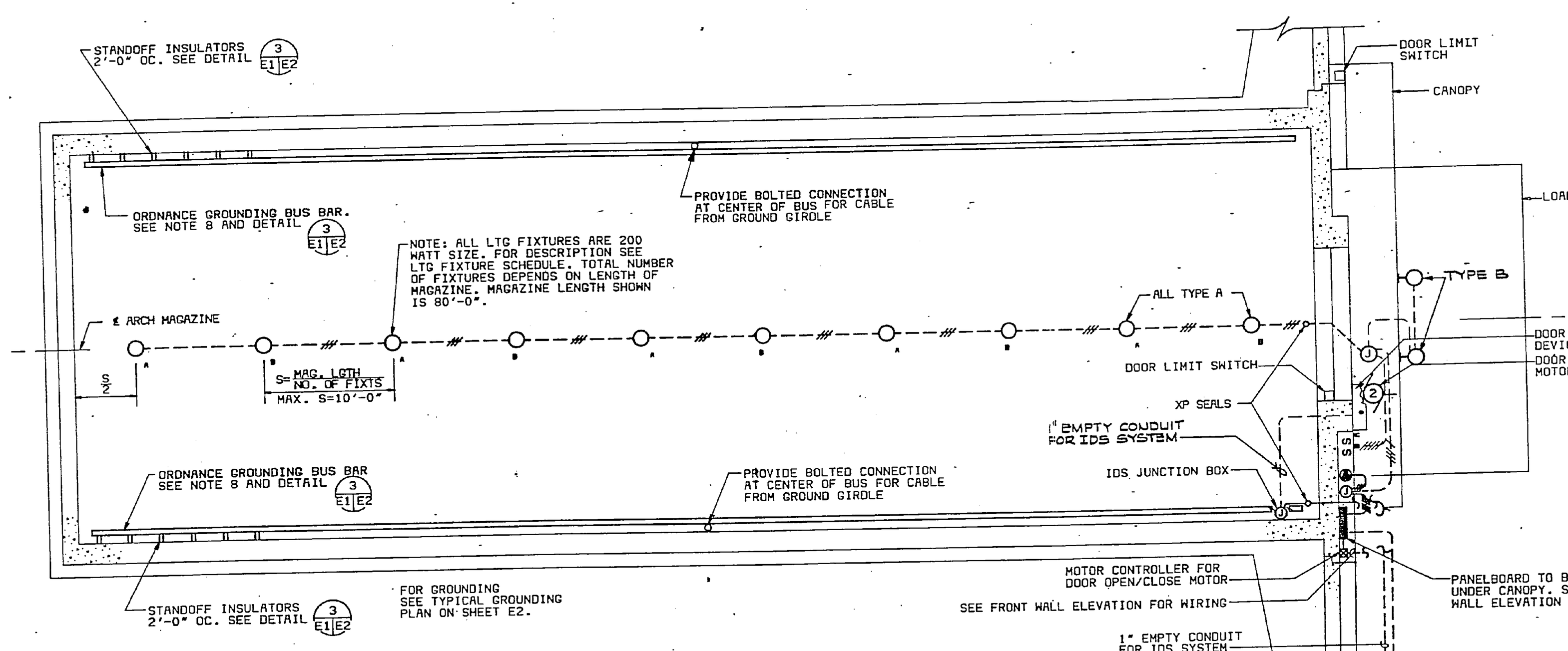

TYPICAL PLAN
LENGTH VARIES 50' THROUGH 80'
SCALE: 1/4" = 1'-0"

LEGEND

- LIGHTING FIXTURE - CEILING TYPE A, LETTER DENOTES SWITCH CONTROL; LIGHTING FIXTURE - BRACKET TYPE B — SEE LTG FIXTURE SCHEDULE ON NAVFAC DRAWING 1404324
- SINGLE RECEPTACLE - GND TYPE - 20A, 125V, 3P
- JUNCTION BOX, WALL MOUNTED
- $S_{A,B}$ LOCAL SWITCH WITH PILOT LIGHT - SP-20A, 120/277V (SUBSCRIPT DENOTES FIXTURE CONTROL)
- DISTRIBUTION PANELBOARD 120/240V, 1Ø, 3W, S/N, SOLID GROUND BUS IN NEMA 3R ENCLOSURE
- EXPLOSION PROOF SEAL FITTING IN CONDUIT RUN
- WIRING IN RIGID CONDUIT - EXPOSED (CROSS MARKS DENOTE NUMBER OF WIRES WHEN OTHER THAN TWO)
- GROUNDING CONDUCTOR AS DESCRIBED (SEE NOTE 5)
- GROUND ROD (DRIVEN IN EARTH) W/TEST POCKET
- CONTINUOUS BURIED GND GIRDLE - NO. 1/0 AWG BARE STRD COPPER CABLE-1'-6" MIN. BELOW GRADE EXCEPT 2'-0" MIN. UNDER ROADWAY (SEE NOTE 6)
- XP EXPLOSION PROOF
- WP WEATHER PROOF
- MOTOR - NUMBER DENOTES HORSEPOWER
- CABLE TO CABLE CONNECTION BY EXOTHERMIC WELD PROCESS
- MOTOR CONTROLLER

NOTES

1. INTERIOR ELECTRICAL EQUIPMENT AND ITS INSTALLATION SHALL CONFORM TO NATIONAL ELECTRICAL CODE NFPA 70 LATEST REVISION FOR THE TYPE OF HAZARDOUS LOCATION INVOLVED AND AS A MINIMUM CLASS I, DIVISION II, GROUP D AND CLASS II, DIVISION II, GROUP G.
2. RACEWAY SHALL BE RIGID STEEL, THREADED CONDUIT MIN. SIZE 3/4".
3. CONDUCTORS SHALL BE COPPER WITH RHW OR THW INSULATION (EXCEPT GROUND CONDUCTOR). MINIMUM SIZE NO. 12AWG.
4. GROUND RODS SHALL BE INSTALLED IN UNDISTURBED EARTH AND SHALL NOT BE LOCATED IN OR UNDER PAVING OF ANY KIND OR IN ANY UNPAVED WALK, PATH OR ROADWAY.
5. FOR GENERAL GROUNDING REQUIREMENTS REFER TO NAVFAC STANDARD SPECIFICATION M18.
6. WHERE GROUND GIRDLE IS LOCATED UNDER ROADWAY THE CABLE SHALL BE INSTALLED IN HEAVY WALL RIGID PVC CONDUIT FOR PHYSICAL PROTECTION.
7. FOR DETAILS OF CONCRETE ARCH GROUNDING CONNECTIONS SEE NAVFAC DWG 1404324.
8. ORDNANCE GROUNDING BUS BAR SHALL BE FOR EQUIPMENT GROUNDING ONLY AND SHALL HAVE ONE POINT GROUND CONNECTION TO THE GROUND GIRDLE AS SHOWN, AND SHALL OTHERWISE BE COMPLETELY ISOLATED FROM ALL OTHER METAL PARTS AND/OR GROUND CONNECTIONS OF THE STRUCTURE. BUS BARS ARE REQUIRED IN A LIMITED NUMBER OF MAGAZINES ONLY.

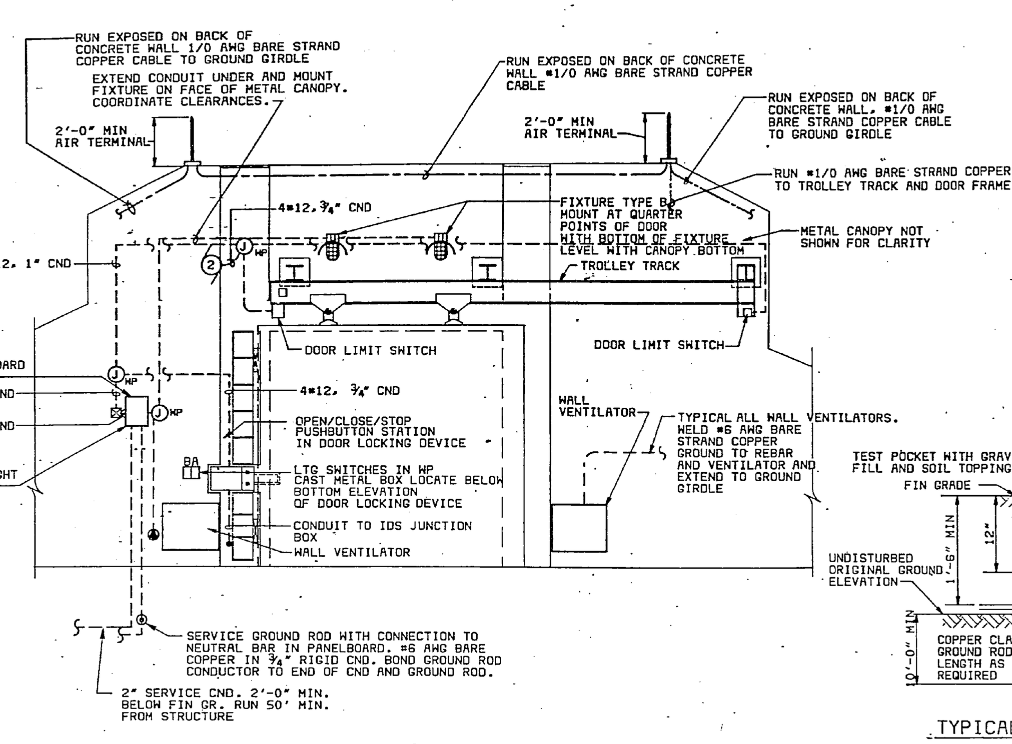

FRONT WALL ELEVATION
SCALE: 3/8"=1'-0"

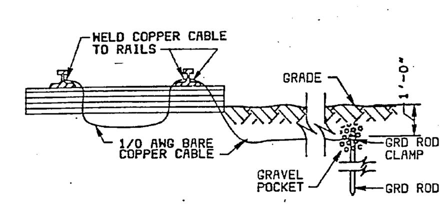

NOTE: RAILROAD NOT PART OF STD DWG. IF RAILROAD IS USED, PROVIDE GROUNDING AS INDICATED.

DETAIL-GROUNDING OF RR TRACK
NO SCALE

NOTES - GROUNDING
1. ALL REINFORCING STEEL IN BUILDING, PLATFORM, RETAINING WALLS, PAVEMENT IN FRONT OF BUILDING, AND ALL METAL PARTS AND EQUIPMENT IN BUILDING SHALL BE BONDED TO GROUND GIRDLE. CONNECTIONS SHALL BE NO. 6 AWG MIN. BARE COPPER WIRE OR EQUIVALENT CAPACITY COPPER BRAID STRAP.

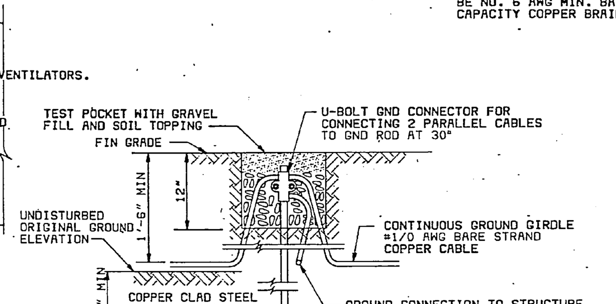

TYPICAL GND ROD INSTALLATION DETAIL 1 E1 E1
NO SCALE

GRAPHIC SCALES
1/4" = 1'-0" 4' 2' 0 4' 8'
3/8" = 1'-0" 12"6"0 1' 2' 3' 4' 5' 6' 7'

FOR REVIEW ONLY NOT FOR USE IN CONSTRUCTION

METRIC CONVERSIONS

1/4" = 6.4MM
3/8" = 9.5MM
3/4" = 19.1MM
1 1/2" = 381MM
2" = 51MM
12" = 305MM
1'-6" = 457MM
2'-0" = 610MM
10'-0" = 3048MM
80'-0" = 24.40MM

CHECK GRAPHIC SCALES BEFORE USING

HAYES, SEAY, MATTERN & MATTERN ARCHITECTS ENGINEERS PLANNERS ROANOKE, VIRGINIA

DEPARTMENT OF THE NAVY
NAVAL FACILITIES ENGINEERING COMMAND
200 STOVALL STREET ALEXANDRIA, VA. 22332

STANDARD
EARTH-COVERED CONCRETE ARCH MAGAZINE

ELECTRICAL
PLANS AND DETAILS

DSGN DB CHK
SUPV CH ENGR
SUBMITTED BY DATE
NORTHDIV HD DIR
NAVFAC RVD DIR
APPROVED DATE
SATISFACTORY TO DATE

SIZE F | CODE IDENT. NO. 80091 | NAVFAC DRAWING NO. 1404323
CONSTR. CONTR. NO.
SCALE AS NOTED | SPEC. | SHEET E1 OF

AD E 01E .AU3082.E1711