REVISIONS				
ZONE	SYM	DESCRIPTION	DATE	APPROVAL
	A	UPDATED REVISIONS ON DRAWING INDEX, SH 2.	12-80	

ASR-8
RADAR SITE
INSTALLATION
STANDARD PLANS

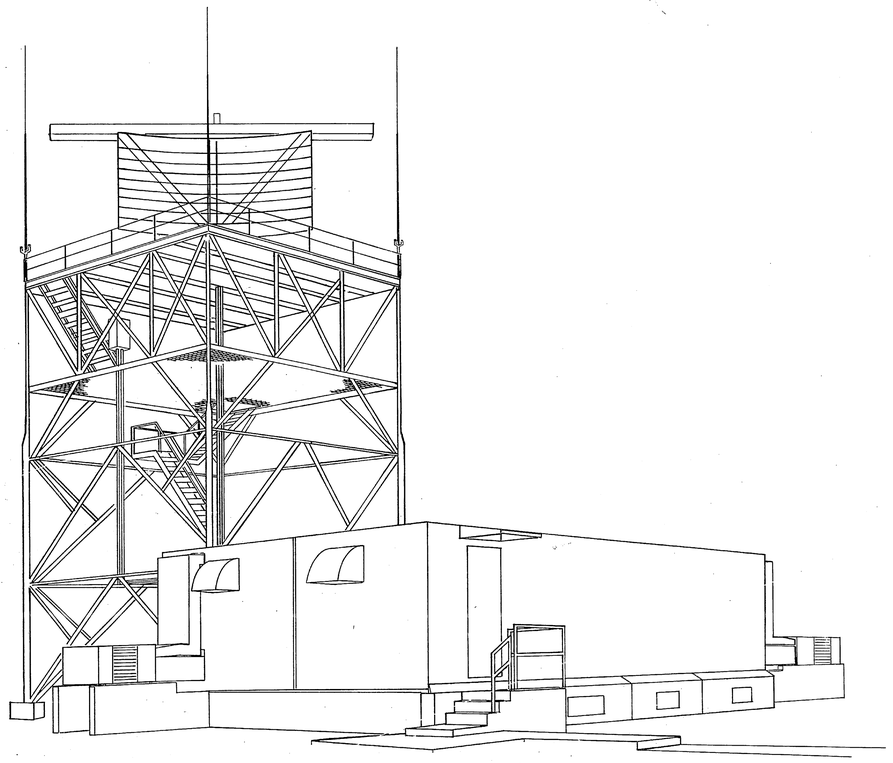

NAVELEX STANDARD PLAN NO.
0100801A

NAVAL ELECTRONIC SYSTEMS COMMAND

GENERAL SERVICE — FOR SHORE USE

STANDARD PLAN
ASR-8 RADAR
DRAWING INDEX AND GENERAL NOTES

DRAFTSMAN	PROJ ENG
CHECKED	SPONSOR
ACQ ENGR	SECT. HEAD
APPROVED	DATE
APPROVED	DATE
SATISFACTORY TO:	
ACTIVITY	DATE

SIZE	CODE IDENT NO.	NAVELEXSYSCOM DRAWING NO.	REV.
F			

SCALE NONE — SHEET 1 OF 2

ENCL ( ) TO NAVELEXSYSENGCEN, CHASN LTR SER OF

DRAWING INDEX

NAVELEX DRAWING NO.	NO. OF SHEETS	DRAWING TITLE	REV
F28687-0100801	2	STANDARD PLAN, ASR-8 RADAR DRAWING INDEX AND GENERAL NOTES	A
F28687-0100802	5	STANDARD PLAN, ASR-8 RADAR MASTER LIST OF MATERIALS	A
F28687-0100803	1	STANDARD PLAN, ASR-8 RADAR TYPICAL SITE PLAN	A
F28687-0100804	4	STANDARD PLAN, ASR-8 RADAR SHELTER FOUNDATION PLAN AND DETAILS	A
F28687-0100805	4	STANDARD PLAN, ASR-8 RADAR SHELTER OFFLOADING AND ERECTION PLAN	A
F28687-0100806	3	STANDARD PLAN, ASR-8 RADAR SHELTER ARRANGEMENT OF EQUIPMENT	A
F28687-0100807	8	STANDARD PLAN, ASR-8 RADAR TOWER ERECTION PLAN	
F28687-0100808	3	STANDARD PLAN, ASR-8 RADAR TOWER ELECTRICAL PLAN	A
F28687-0100809	2	STANDARD PLAN, ASR-8 RADAR REMOTE SITE ARRANGEMENT OF EQUIPMENT	A
F28687-0100810	5	STANDARD PLAN, ASR-8 RADAR SYSTEM INTER-CONNECTION DIAGRAM	
B28687-0100811	80	STANDARD PLAN, ASR-8 RADAR WIRING DIAGRAMS	
F28687-0100812	2	STANDARD PLAN, ASR-8 RADAR CABLE PRESSURIZATION DETAILS	

REFERENCE DRAWINGS

FAA D-5419	19	AIRPORT SURVEILLANCE RADAR ASR-4 THRU ASR-7 TOWER
FAA D-5453	18	AIRPORT SURVEILLANCE RADAR ASR-4 THRU ASR-7 TOWER
FAA D-5454	23	AIRPORT SURVEILLANCE RADAR ASR-4 THRU ASR-7 TOWER
T.I. A-96214-870569	7	INVENTORY, EQUIPMENT, AIRPORT SURVEILLANCE RADAR MODEL ASR-8, TYPE FA-9335
T.I. A-96214-879053	36	TEST PROCEDURE, ELECTRICAL FIELD ACCEPTANCE TEST, AIRPORT SURVEILLANCE RADAR MODEL ASR-8, TYPE FA-9335
T.I. A-96214-879054	42	DATA SHEET, ELECTRICAL FIELD ACCEPTANCE TESTS, AIRPORT SURVEILLANCE RADAR MODEL ASR-8, TYPE FA-9335.
T.I. A-96214-886419	10	TEST PROCEDURE, FIELD INSTALLATION AIRPORT SURVEILLANCE RADAR MODEL ASR-8 TYPE FA-9335.
T.I. A-96214-886420	6	DATA SHEET, ACCEPTANCE TEST, FIELD INSTALLATION TEST CHECK LIST, AIRPORT SURVEILLANCE RADAR MODEL ASR-8 TYPE FA-9335.
T.I. -6310.13		PRELIMINARY INSTRUCTIONS BOOK, AIRPORT SURVEILLANCE RADAR MODEL ASR-8, TYPE FA-9335
		VOLUME I, SECTIONS I-II, SYSTEM
		VOLUME II, SECTIONS I-II, TRANSMITTER UNIT 1 & 4
		VOLUME III, SECTIONS I-II, RECEIVER UNITS 2 & 5
		VOLUME IV, SECTIONS I-II, PROCESSOR
		VOLUME V, SECTIONS I-II, CONTROL & AUXILIARY EQUIPMENT
		VOLUME VI, SECTIONS I-II, ANTENNA UNIT 8, TYPE FA-9344
		VOLUME VII, SECTIONS I-II, MAINTENANCE, PLAN POSITION INDICATOR UNIT, TYPE FA-9343
		VOLUME VIII, SECTIONS I-VII, TRANSPORTABLE BUILDING MODULE A, TYPE FA-9335/1, MODULE B, TYPE FA-9335/2
		VOLUME IX, TROUBLE SHOOTING MANUAL
ASTM 123		AMERICAN SOCIETY FOR TESTING AND MATERIAL
ASTM 153		AMERICAN SOCIETY FOR TESTING AND MATERIAL

GENERAL NOTES

1. THE ASR-8 RADAR SHELTER IS COMPRISED OF TWO TRANSPORTABLE BUILDINGS WITH THE DUAL CHANNEL RADAR SYSTEM FACTORY INSTALLED. THE TRANSPORTABLE BUILDING IS SHIPPED ON SPECIALLY CONSTRUCTED LO-BOYS WHILE FRAGILE AND BULKY EQUIPMENT IS PACKAGED SEPERATELY AND SHIPPED IN ENCLOSED VANS.
   IN VIEW OF THE ABOVE THE FOLLOWING VERIFICATIONS ARE DEEMED NECESSARY:
   1. VERIFY THAT THE ON SITE ACCESS ROADS TO THE EQUIPMENT INSTALLATION SITE ARE ADEQUATE FOR EQUIPMENT DELIVERY WITHIN THE CRITERIA THAT THE TRANSPORTABLE BUILDING WILL BE DELIVERED BY TRUCK/TRAILER WHICH WILL BE 65 FEET TO 75 FEET IN LENGTH AND WILL BE CAPABLE OF MANEUVERING 14% ROAD GRADES, (8°) MAXIMUM, AND ROAD IRREGULARITIES (DIPS, BUMPS, ETC.) NOT EXCEEDING 18 INCHES. ANY EXISTING ROADWAY USED MAY REQUIRE MODIFICATION TO ACCOMMODATE THE LONG TRUCK/TRAILER AND ITS OVER WIDTH.
   2. VERIFY THAT THE TURNING RADIUS OF THE SITE ACCESS ROAD IS ADEQUATE FOR EQUIPMENT DELIVERY WITHIN THE CRITERIA THAT THE ELECTRICAL EQUIPMENT DELIVERY TRUCK/TRAILERS, BEING 65 FEET TO 75 FEET IN LENGTH WILL REQUIRE 50 TO 60 FEET CENTERLINE RADIUS CURVES.
2. PRIOR TO ASR-8 RADAR ANTENNA TOWER ERECTION, THE FOLLOWING VERIFICATIONS ARE DEEMED NECESSARY:
   1. VERIFY CLEARANCES AND ACCESS FOR CRANE AND FORK LIFT ARE ADEQUATE.
   2. VERIFY TOWER FOUNDATION DIMENSIONS AND ELEVATIONS WITH RESPECT TO ASR-8 TRANSPORTABLE BUILDING FOUNDATION ARE WITHIN TOLERANCES SHOWN ON NAVELEX DRAWING NO. F-28687-0100804.
3. PRIOR TO THE DELIVERY OF THE ASR-8 TRANSPORTABLE BUILDINGS AND ASSOCIATED EQUIPMENT TO THE RADAR SITE THE FOLLOWING VERIFICATIONS ARE DEEMED NECESSARY:
   1. VERIFY THAT THE ANTENNA TOWER HAS BEEN ERECTED PROPERLY TO THE CORRECT HEIGHT AND THAT ANTENNA PEDESTAL PLATFORM IS ORIENTED WITH POINTED SECTION OF THE PLATFORM POINTING TOWARDS THE TRANSMITTER BUILDING AND THAT THE STAIRS ARE LOCATED ON OPPOSITE SIDE OF TOWER FROM TRANSMITTER BUILDING POSITION. SEE NAVELEX DRAWING NO. F-28687-0100807.
   2. VERIFY ASR-8 TRANSPORTABLE BUILDING FOUNDATION DIMENSIONS AND ELEVATIONS ARE WITHIN TOLERANCES SHOWN ON NAVELEX DRAWING NO. F-28687-0100804.
   3. VERIFY THAT THE CONDITION OF THE SITE ACCESS AND SITE (BUILDING/TOWER) AREA ARE ADEQUATE FOR MOBILIZED CRANE IMPLACEMENT AT THE BUILDING ROAD-SITE FOR BUILDING AND ANTENNA OFF-LOADING FROM TRUCK/TRAILER ONTO FOUNDATION (BUILDING) AND ONTO TOWER (ANTENNA). SOIL REINFORCEMENT WITH ROCK, WOOD MEMBERS (4 TO 6 INCHES THICK, LAYED CROSS-WISE, TWO OR MORE LAYERS) OR STEEL MATS (SUCH AS LANDING STRIP MAT SECTIONS) SHOULD BE CONSIDERED TO PROVIDE NECESSARY SUPPORT FOR MOBILIZED CRANE VEHICLE TO PREVENT BOGGING IN SOIL.
   4. VERIFY ANY SPECIAL ON SITE ACCESS REQUIREMENTS AND INSTRUCTIONS FOR INSTALLATION PERSONNEL AND VEHICLES, AS APPLICABLE, SUCH AS: LOCAL CONTROLLER AND/OR GROUND CONTROLLER CLEARANCE FOR RUNWAY/TAXI WAY CLEARANCES; SITE ESCORT REQUIREMENTS, USE OF FLAGS, RADIO, LIGHTS AND VEHICLE REGISTRATION.
4. AFTER RECEIPT OF EQUIPMENT VISUALLY INSPECT ALL EQUIPMENT FOR DAMAGE DURING SHIPMENT, ESPECIALLY WHERE ANY SHIPPING CARTONS OR CRATES HAVE BEEN DAMAGED. CHECK ALL PARTS AGAINST THE SHIPPING LIST TO ENSURE ALL PARTS ARE ON SITE PRIOR TO EQUIPMENT INSTALLATION.
5. PRIOR TO OFF-LOADING TRANSPORTABLE BUILDING THOROUGHLY REVIEW T.I. 6310.13 INSTRUCTION BOOK, VOLUME VIII SECTION II INSTALLATION INSTRUCTIONS FOR INSTALLATION SEQUENCE. REFER TO BUILDING NAME PLATE LOCATED ADJACENT TO EXTERIOR DOOR OF EACH SHELTER TO DETERMINE THE BUILDING MANUFACTURER, THEN REFER TO SECTION II, PARAGRAPHS 3.7 AND 3.8 FOR INSTALLATION INSTRUCTIONS FOR THAT PARTICULAR TYPE OF BUILDING.

1 10 20 30 40
41 50 80

STANDARD PLAN
ASR-8 RADAR
DRAWING INDEX AND GENERAL NOTES

NAVELEX STANDARD PLAN NO.
0100801A

SIZE	CODE IDENT NO.	NAVELEXSYSCOM DRAWING NO.	REV.
F			
SCALE NONE		SHEET 2 OF 2	

KAE 19 1153 7-76 W2545+ CAROLINA E&F P-495 GND NESEC-CHAS-3000-2B

MASTER LIST OF MATERIAL

ITEM	DESCRIPTION	MFG. PART NO. SERIAL NO.	STANDARD NAVY STOCK NO.	REMARKS	FURNISHED BY				0100804		0100805		0100807		0100808		0100809		0100810		0100812						TOTAL
					HQ	E.V.	EFA	STA	ITEM	QTY	ITEM	QTY	ITEM	QTY	ITEM	QTY	ITEM	QTY	ITEM	QTY	ITEM	QTY	ITEM	QTY	ITEM	QTY	
1	BOLTS 1/2" Ø X 10 1/2"						✓		1	30																	
2	BOLTS 3/8" Ø X 13"						✓		2	4																	
3	BOLTS 3/8" Ø X 9 1/2"						✓		3	12																	
4	CONDUIT 3 1/2"						✓		4	A/R											3	A/R					
5	CONDUIT (PVC)						✓		5	A/R																	
6	CONDUIT 2 1/2"						✓		6	A/R																	
7	INTERMEDIATE HANDRAIL, 2'-7 1/2"						✓		7	2																	
8	INTERMEDIATE HANDRAIL, 2'-6 1/2"						✓		8	2																	
9	INTERMEDIATE HANDRAIL, 3'-6 1/2"						✓		9	2																	
10	#4 REBAR							✓	10	A/R																	
11	1 1/2" SCH. 40 PIPE 7"						✓		11	A/R																	
12	GUARD RAIL MOUNTING PLATE						✓		12	12																	
13	2" SCH. 40 PIPE 7"						✓		13	12																	
14	BOLT 3/8" Ø X 3"						✓		14	12																	
15	WASHER, FLAT 3/8"						✓		15	12							4	8									
16	LOCKWASHER 3/8"						✓		16	12							5	8									
17	NUT 3/8"						✓		17	12					20	6											
18	BOLT 5/16"						✓		18	12																	
19	WASHER, FLAT						✓		19	12																	
20	LOCKWASHER						✓		20	12																	
21	NUT						✓		21	12																	
22	ANGLE					✓			22	10																	
23	ANGLE					✓			23	20																	
24	NUT					✓			24	20																	
25	WASHER, LOCK					✓			25	20																	
26	WASHER, LOCK					✓			26	20																	
27	PLATE					✓			27	10																	
28	OUTBOARD TIE-DOWN PLATE					✓			28	10																	
29	INBOARD TIE-DOWN PLATE					✓			29	5																	
30	SHIM PLATE (OUTBOARD TIE-DOWN)					✓			30	20																	
31	END PIECE						✓				1	2															
32	CENTER PIECE						✓				2	1															
33	SPLICE TUBE						✓				3	2															
34	CLIP HOLDER						✓				4	2															
35	END PLATE						✓				5	2															
36	AIR MIXING CHAMBER COVER, 3' X 1'-6"					✓					6	2															
37	AIR CONDITIONING SUPPLY COVER, 1' X 3'					✓					7	2															
38	EMERGENCY AIR EXHAUST LOUVER 25" X 25"					✓					8	4															
39	7/8" STEEL WIRE ROPE			QUANTITY VARIES			✓				9	100'															
40	BEACON OPENING, 8" X 8"					✓					10	1															
41	WAVEGUIDE COVER, 1'-6" X 8"					✓					11	1															
42	ELECTRICAL WIRE COVER, 1' X 1'					✓					12	2															
43	WAVEGUIDE COVER, 1' X 3'					✓					13	2															
44	7 TON SHACKLE (ROUND PIN ANCHOR)						✓				14	4															
45	STRUCTURAL PLUG COVER, 24' X 7'					✓					15	2															
46	7/8" WIRE ROPE CLIP						✓				16	2															
47	STEEL RING (22 TON LIFT CAPACITY)			2 3/4" DIA.			✓				17	1															
48	1/2" CONDUIT BUSHING						✓				18	1															
49	2 1/2" CONDUIT BUSHING						✓				19	2															
50	2 1/2" CONDUIT LOCK NUT						✓				20	2															
51	1/2" CONDUIT LOCK NUT						✓				21	1															
52	1/2" CONDUIT STUFFING TUBE						✓				22	1															
53	2 1/2" CONDUIT ADAPTER						✓				23	4															
54	2 1/2" FLEXIBLE STEEL CONDUIT			H/D GALV.			✓				24	2															
55	3 1/2" CONDUIT BUSHING						✓				25	4									5	6					
56	3 1/2" CONDUIT LOCK NUT						✓				26	4									4	6					
57	3 1/2" CONDUIT ADAPTER						✓				27	8									12	3					
58	3 1/2" FLEXIBLE STEEL CONDUIT			H/D GALV.			✓				28	4									11	3					
59	BRACKET	T.I. 510654-2				✓							1	1													
60	BRACKET	T.I. 510655-1				✓							2	1													
61	BRACKET	T.I. 4204438-1				✓							3	4													
62	PACKING	T.I. MS 90064-9				✓							4	4													
63	STUD (.250-20-2A)	T.I. 404514-1				✓							5	4													
64	SCREW (.250-20UNC-3A X .625)	T.I. MS16995-49				✓							6	28													
65	SCREW (.250-20UNC-3A X .750)	T.I. MS 16995-50				✓							7	20													
66	SCREW (.500-20UNF-2A X 1.750)	T.I. MS 35308-414				✓							8	4													
67	SCREW (.250-28UNF-2A X 1.000)	T.I. MS 35308-308		INSTALL 3' APT.		✓							9	28													
68	WASHER, SPLIT (.250)	T.I. MS 35338-139		INSTALL 3' APT.		✓							10	138													
69	WASHER, SPLIT (.500)	T.I. MS 35338-143				✓							11	20													
70	WASHER, FLAT (.500)	T.I. MS 15795-819				✓							12	24													
71	WASHER, FLAT (.250)	T.I. MS 15795-810				✓							13	26													
72													14														
73	NUT (.250-28UNF-2B)	T.I. MS 51972-1		INSTALL 3' APT.		✓							15	84													
74	NUT (.250-20UNC-2B)	T.I. 416653-7				✓							16	8													
75	NUT (.500-20-UNF-28)	T.I. MS 51972-5				✓							17	20													
76	WAVEGUIDE ASSEMBLY	T.I. 510734-1				✓							18	4													
77	BRACKET, NO. 2	T.I. 510672-1				✓							19	A/R													
78	WAVEGUIDE ASSEMBLY NO. 1	T.I. 510627-1				✓							20	A/R													
79	WAVEGUIDE ASSEMBLY NO. 2	T.I. 510628-1				✓							21	A/R													
80	WAVEGUIDE ASSEMBLY NO. 3	T.I. 510629-1				✓							22	A/R													
81	WAVEGUIDE, FLEXIBLE	T.I. 821487-4				✓							23	A/R													
82	CLAMP, CONDUIT	T.I. 404495-2		INSTALL 3' APT.		✓							24	20													
83	CLAMP, CONDUIT	T.I. 404495-1		INSTALL 3' APT.		✓							25	28													
84	CABLE ASSEMBLY (W402)	T.I. 861191-1				✓							26	1													
85																											
86																											

REVISIONS

ZONE	SYM	DESCRIPTION	DATE	APPROVAL
	A	CHANGED ITEM 1. ADDED 339, 340 & 341.	12-80	

NOTES:

QUANTITY SHOWN FOR F-28687-0100807 IS FOR A 37' TOWER, SEE REFERENCE 4 FOR OTHER TOWER HEIGHTS.

LEGEND

- T.I. TEXAS INSTRUMENTS
- H/D HOT DIPPED
- N.T.P. NATIONAL THERMO-PLASTIC
- N.W. NATIONAL WIRE
- B-R BUNKER RAND
- A.I.L. AIRBORNE INSTRUMENT LABORATORY
- HQ. EQPT/MATL FURNISHED BY NAVELEX HQ
- E.V. EQPT/MATL FURNISHED BY EQUIPMENT VENDOR (T.I.)
- E.F.A. EQPT/MATL FURNISHED BY ENGINEERING FIELD ACTIVITY

NO.	REFERENCES	DRAWING NO.
7	STANDARD PLAN ASR-8 RADAR CABLE PRESSURIZATION DETAILS	F-28687-0100812
6	STANDARD PLAN ASR-8 RADAR REMOTE SITE ARRANGEMENT OF EQUIPMENT	F-28687-0100809
5	STANDARD PLAN ASR-8 TOWER ELECTRICAL PLAN	F-28687-0100808
4	STANDARD PLAN ASR-8 TOWER ERECTION PLAN	F-28687-0100807
3	STANDARD PLAN ASR-8 RADAR SHELTER ARRANGEMENT OF EQUIPMENT	F-28687-0100806
2	STANDARD PLAN ASR-8 RADAR SHELTER OFFLOADING AND ERECTION PLAN	F-28687-0100805
1	STANDARD PLAN ASR-8 RADAR SHELTER FOUNDATION PLAN AND DETAILS	F-28687-0100804

NAVELEX STANDARD PLAN NO. 0100802A

DRAFTSMAN / PROJ. ENG / CHECKED / SPONSOR / ACQ ENGR / SECT. HEAD / APPROVED / DATE / APPROVED / CHIEF ENGINEER / DATE / SATISFACTORY TO / ACTIVITY / DATE

NAVAL ELECTRONIC SYSTEMS COMMAND

GENERAL SERVICE — FOR SHORE USE

STANDARD PLAN

ASR-8 RADAR

MASTER LIST OF MATERIAL AND EQUIPMENT

SIZE F | CODE IDENT NO. | NAVELEXSYSCOM DRAWING NO. | REV

SCALE NONE | SHEET 1 OF 5

MASTER LIST OF MATERIAL

ITEM	DESCRIPTION	MFG. PART NO. SERIAL NO.	STANDARD NAVY STOCK NO.	REMARKS	FURNISHED BY HQ	F.V.	EFA	STA	0100804 ITEM	0100804 QTY	0100805 ITEM	0100805 QTY	0100807 ITEM	0100807 QTY	0100808 ITEM	0100808 QTY	0100809 ITEM	0100809 QTY	0100810 ITEM	0100810 QTY	0100812 ITEM	0100812 QTY	ITEM	QTY	ITEM	QTY	TOTAL
87	CABLE ASSEMBLY (W413)	T.I. 510762-1		MIN. BEND 6.0"		✓							27	1													
88	SCREW .250-28UNF-2A X .500	T.I. MS 51958-79				✓							28	20													
89	SCREW .250 X 1.500-28UNF-2A X 1.500	T.I. MS 35308-312				✓							29	20													
90	SLEEVE, CABLE	T.I. 821922-1				✓							30	28													
91	MARKER	T.I. 878131-26				✓							31	1													
92	SLEEVE, SOLDER	T.I. 530171-5				✓							32	8													
93	TERMINAL	T.I. 427628-3				✓							33	11													
94	WIRE	T.I. 417735-229				✓							34	A/R													
95	TERMINAL	T.I. 427628-6				✓							35	1													
96	CABLE ASSEMBLY, W401, AC POWER	T.I. 861190-1				✓							36	1													
97	SCREW (.250-28UNF-2A X .625)	T.I. MS 51958-80				✓							37	8													
98	CABLE ASSEMBLY, (W412)	T.I. 510763-1		MIN. BEND 6.0"		✓							38	1													
99	CONNECTOR	MS 39012-01-4				✓							39	4													
100	MARKER	T.I. 878131-148				✓							40	1													
101	TERMINAL	T.I. 427628-1				✓							41	24													
102	MARKER	T.I. 878131-150				✓							42	1													
103	TERMINAL	T.I. 427628-10				✓							43	1													
104	MARKER	T.I. 878131-157				✓							44	1													
105													45														
106	MARKER	T.I. 878131-159				✓							46	1													
107	LIGHTNING AIR TERMINAL						✓								1	4											
108	STANDARD TWO GLOBE OBSTRUCTION LGT.	CROUSE-HINDS 43621					✓								2	2											
109	CONNECTOR	BURNDY NO. GR. 1642					✓								3	2											
110	CONNECTOR	BURNDY NO. GR. 1626					✓								4	4											
111	150 W WEATHER JUNC. BOX						✓								5	3											
112	14" RLM REFLECTOR						✓								6	3											
113	100 W TYPE A LAMPS						✓								7	3											
114	GALVANIZED PIPE 1¼" X 15'						✓								8	4											
115	3/8" Ø U-BOLT						✓								9	8											
116	∠2" X 2" X 3/16"						✓								10	8											
117	5/8" X 12" SOLID COPPER POINT			NICKEL TIPPED			✓								11	4											
118	5/8" Ø, #2 GROUND ROD X 6'-4"			COPPER CLAD			✓								12	4											
119	ADAPTER						✓								13	4											
120	GROUND ROD 3/4" X 10' W/CLAMP			QUANTITY VARIES			✓								14	14											
121	#4/0 BARE COPPER COUNTERPOISE WIRE			QUANTITY VARIES			✓								15	800'											
122	#2 BARE STRANDED COPPER WIRE			QUANTITY VARIES			✓								16	350'											
123	SCREW .375" X 24 X 1.250"					✓									17	6											
124	WASHER, FLAT 7/16"					✓									18	6											
125	WASHER, SPLIT 3/8"					✓									19	6											
126	HANDLE					✓									21	1											
127	ROLLPIN 3/16" X 1.500"					✓									22	1											
128	INCANDESCENT LAMP - 125 W						✓								23	4											
129	WEATHER PROOF DUPLEX RECEPTACLE - 20A PASS-SEYMOUR 4500 & 6200						✓								24	1											
130	PULLBOX 15" X 15" X 24"	NEMA 4					✓								25	1											
131	ADAPTER, TERMINAL, 2"					✓									26	1											
132	NUT, CONDUIT, 2"					✓									27	1											
133	ACCESS FITTING, ELBOW, 2"					✓									28	3											
134	2" CONDUIT			QUANTITY VARIES		✓									29	20'											
135	TEE, 2"					✓									30	1											
136	PIPE, 1¼"			QUANTITY VARIES		✓									31	20'											
137	REDUCING BUSHING, 2" X 1¼"					✓									32	4											
138	ELBOW, 1¼" X 45°					✓									33	2											
139	ELBOW, 1¼" X 90°					✓									34	1											
140	CONDUIT, FLEXIBLE, 1¼"					✓									35	2											
141	ACCESS FITTING, ELBOW, 1¼"					✓									36	2											
142	END BELL					✓									37	1											
143															38												
144	JUNCTION BOX					✓									39	1											
145	LOCKABLE, LIGHT SWITCH					✓									40	2											
146	JUNCTION BOX 48" X 36" X 12"					✓											1	1									
147	FLOOR STAND 18" X 12"			HOFFMAN A-FK1812			✓										2	1-SET									
148	BOLT, HEX-3/8"-16 X 1½"						✓										3	8									
149	NUT, HEX-3/8"-16					✓	✓								20	6	6	8									
150	MASTER INTERCOM UNIT					✓											7	2									
151	SLAVE INTERCOM UNIT					✓											8	1									
152	FLAT WASHER - 3/8"						✓										4	8									
153	LOCK WASHER - 3/8"						✓										5	8									
154	CABLE, 3 COND. #12 AWG	BELDEN 18206					✓												1	350'							
155	CABLE	A.I.L. TYPE VI					✓												2	50'							
156	CABLE	A.I.L. TYPE I					✓												3	100'							
157	CABLE	A.I.L. TYPE IV					✓												4	50'							
158	CABLE, COAXIAL	RG-11A/U					✓												5	200'							
159	CABLE, 7 COND. #16 AWG	N.W. 716 SJ					✓												6	50'							
160	CABLE	A.I.L. TYPE V					✓												7	50'							
161	CABLE	A.I.L. TYPE III					✓												8	50'							
162	CABLE	A.I.L. TYPE II					✓												9	100'							
163	CABLE, 1 COND. #4 AWG	ALPHA 3097					✓												10	200'							
164	CABLE, COAXIAL	RG-59B/U					✓												11	1200'							
165	CABLE, COAXIAL	RG-108A/U					✓												12	200'							
166	CABLE, 7 COND. #18 AWG	N.W. 718 SJ					✓												13	100'							
167	CONNECTOR	M81511/06E				✓													14	1							
168	CONNECTOR		MS-3126F-22-55P			✓													15	2							
169	CONNECTOR		MS-3126F-22-55S			✓													16	4							
170	CONNECTOR		MS-3126F-22-55PW			✓													17	2							
171																											
172																											

REVISIONS

ZONE	SYM	DESCRIPTION	DATE	APPROVAL

STANDARD PLAN

ASR-8 RADAR

MASTER LIST OF MATERIAL AND EQUIPMENT

NAVELEX STANDARD PLAN NO. 0100802A

SIZE	CODE IDENT NO.	NAVELEXSYSCOM DRAWING NO.	REV.
F			

SCALE NONE SHEET 2 OF 5

ENCL ( ) TO NAVELEXSYSENGCEN CHASN LTR SER OF

MASTER LIST OF MATERIAL

ITEM	DESCRIPTION	MFG. PART NO. SERIAL NO.	STANDARD NAVY STOCK NO.	REMARKS	FURNISHED BY HQ	E.V.	EFA	STA	0100804 ITEM	0100804 QTY	0100805 ITEM	0100805 QTY	0100807 ITEM	0100807 QTY	0100808 ITEM	0100808 QTY	0100809 ITEM	0100809 QTY	0100810 ITEM	0100810 QTY	0100812 ITEM	0100812 QTY	ITEM	QTY	TOTAL
173	CONNECTOR		MS-3126F-20-41P			✓													18	2					
174	CONNECTOR, COAXIAL	UG-959B/U					✓												19	8					
175	CONNECTOR		MS-3126F-18-11S				✓												20	1					
176	CONNECTOR		MS-3126F-22-55PY			✓													21	1					
177	CONNECTOR		MS-3126F-20-41S			✓													22	2					
178	CONNECTOR	AUTO METAL 024980					✓												23	5					
179	CONNECTOR		MS-3126F-22-55PX			✓													24	1					
180	CONNECTOR		MS-3126F-14-19S			✓													25	1					
181	CONNECTOR, COAXIAL	UG-260B/U				24	36												26	60					
182	CONNECTOR, COAXIAL	M39012-16-0015					✓												27	9					
183	CONNECTOR		MS-3126F-22-55SW			✓													28	1					
184	CONNECTOR		MS-3126F-14-19P			✓													29	1					
185	CONNECTOR		MS-3106A-20-27S			✓													30	2					
186	CONNECTOR		MS-3106B-18-9B			✓													31	1					
187	TERMINATION, BNC 75 Ω	AMPHENOL 35650-75					✓												32	6					
188																			33						
189	CONNECTOR, ADAPTER "N" TO BNC	UG-94A/4 & UG-349B/U					✓												34	8					
190	CONNECTOR		MS-3106A-20-27P			✓													35	8					
191	CONNECTOR		MS-3106A-16-10SX			✓													36	1					
192	CONNECTOR		MIL C-39012-166-0002			✓													37	2					
193	CONNECTOR	UG-27B/U					✓												38	2					
194	CABLE	N.W. 1922 SJ					✓												39	100'					
195	CONNECTOR		MS-3108B-28-15P			✓													40	1					
196	CONNECTOR		MS-3106A-28-15S			✓													41	1					
197	CONNECTOR		MS-3108B-22-20P			✓													42	1					
198	CONNECTOR		MS-3108B-22-20S			✓													43	1					
199	CONNECTOR		MS-3106A-22-20P			✓													44	1					
200																			45						
201	POWER CORD, 12 FT	BELDEN 17425				✓													46	1					
202	CONNECTOR	HUBBEL 7484				✓													47	2					
203	CABLE, 1 COND. #4 AWG						✓												48	50'					
204	CABLE, 1 COND. #10 AWG						✓												49	50'					
205	CONNECTOR		MS-3106A-16-10S			✓													50	1					
206	CABLE	BELDEN 9422					✓												51	150'					
207	CABLE	BELDEN 8459					✓												52	150'					
208	CONNECTOR		MS-3106A-28-21SX			2	1												53	3					
209	CONNECTOR		MS-3106A-28-21S			1	2												54	3					
210	CONNECTOR		MS-3106A-28-21SW			1	2												55	3					
211	CABLE	BELDEN 9918					✓												56	50'					
212	CABLE	ALPHA 1072					✓												57	150'					
213	CABLE	ALPHA 7672					✓												58	150'					
214	CABLE	ALPHA 1899/3					✓												59	150'					
215	CABLE	ALPHA 5857					✓												60	150'					
216	CABLE	N.W. 8822 J					✓												61	150'					
217	CONNECTOR	96214-533654-126 T.I. FURNISHED					✓												62	2					
218	CONNECTOR		MS-3106A-20-7S			✓													63	1					
219																			64						
220																			65						
221																			66						
222																			67						
223	CABLE, W301	T.I. 861160-1				✓													68	1					
224	CABLE, W302	T.I. 861161-1				✓													69	1					
225	CABLE, W303	T.I. 861162-1				✓													70	1					
226	CABLE, W304	T.I. 861163-1				✓													71	1					
227	CABLE, W305	T.I. 861164-1				✓													72	1					
228	CABLE, W307	T.I. 861166-1				✓													73	1					
229	CABLE, W308	T.I. 861167-1				✓													74	1					
230	CABLE, W309	T.I. 861168-1				✓													75	1					
231	CABLE, W310	T.I. 861169-1				✓													76	1					
232	CABLE, W311	T.I. 861170-1				✓													77	1					
233	CABLE, W312	T.I. 861171-1				✓													78	1					
234	CABLE, W313	T.I. 861172-1				✓													79	1					
235	CABLE, W314	T.I. 861173-1				✓													80	1					
236	CABLE, W315	T.I. 861174-1				✓													81	1					
237	CABLE, W321	T.I. 861176-1				✓													82	1					
238	CABLE, W324	T.I. 861179-1				✓													83	1					
239	CABLE, W325	T.I. 861180-1				✓													84	1					
240																			85						
241	CABLE, W331	T.I. 861181-1					✓												86	1					
242	CABLE, W332	T.I. 861182-1					✓												87	1					
243	CABLE, W337	T.I. 861183-1					✓												88	1					
244	CABLE, W351	T.I. 861184-1					✓												89	1					
245	CABLE, W352	T.I. 861185-1					✓												90	1					
246	CABLE, W353	T.I. 861162-2					✓												91	1					
247	CABLE, W354	T.I. 861163-2					✓												92	1					
248	CABLE, W355	T.I. 861164-2					✓												93	1					
249	CABLE, W357	T.I. 861186-1					✓												94	1					
250	CABLE, W360	T.I. 882949-1					✓												95	1					
251	CABLE, W363	T.I. 861187-1					✓												96	1					
252	CABLE, W371	T.I. 861176-2					✓												97	1					
253																			98						
254	CABLE, W375	T.I. 861189-1					✓												99	1					
255	CABLE, W401						✓												100	1					
256	CABLE, W402						✓												101	1					
257	CABLE, W403	T.I. 510683-1					✓												102	1					
258	CABLE, W404	T.I. 861193-1					✓												103	1					

REVISIONS

ZONE	SYM	DESCRIPTION	DATE	APPROVAL

STANDARD PLAN
ASR-8 RADAR
MASTER LIST OF MATERIAL AND EQUIPMENT

NAVELEX STANDARD PLAN NO.
0100802A

SIZE	CODE IDENT NO	NAVELEXSYSCOM DRAWING NO.	REV.
F			

SCALE NONE SHEET 3 OF 5

ENCL ( ) TO NAVELEXSYSENGCEN CHASN LTR SER OF

DOD NESEC-CHAS-1100-3 REV. (1-76) SAME AS DD FORM 4 FOR 2851 CAROLINA ENG F-445

MASTER LIST OF MATERIAL

ITEM	DESCRIPTION	MFG. PART NO. SERIAL NO.	STANDARD NAVY STOCK NO.	REMARKS	FURNISHED BY HQ	FURNISHED BY E.V.	FURNISHED BY EFA	FURNISHED BY STA.	0100804 ITEM	0100804 QTY	0100805 ITEM	0100805 QTY	0100807 ITEM	0100807 QTY	0100808 ITEM	0100808 QTY	0100809 ITEM	0100809 QTY	0100810 ITEM	0100810 QTY	0100812 ITEM	0100812 QTY	ITEM	QTY	ITEM	QTY	TOTAL
259	CABLE, W405	T.I. 861194-1				✓													104	1							
260	CABLE, W406	T.I. 861195-1				✓													105	1							
261	CABLE, W407	T.I. 861196-1				✓													106	1							
262	CABLE, W408	T.I. 861197-1				✓													107	1							
263	CABLE, W409	T.I. 861198-1				✓													108	1							
264	CABLE, W410					✓													109	1							
265	CABLE, W411	T.I. 510713-1				✓													110	1							
266	CABLE, W412	T.I. 510763-1				✓													111	1							
267	CABLE, W413	T.I. 510762-1				✓													112	1							
268	CABLE, W451	T.I. 510713-2				✓													113	1							
269	CABLE, W459	T.I. 861198-2				✓													114	1							
270	CABLE, R-ER-600	RG-199/U					✓												115	ARS							
271	CABLE, R-ER-601	RG-199/U					✓												116	ARS							
272	CABLE, R-ER-602	RG-199/U					✓												117	ARS							
273	CABLE, R-ER-900	RG-199/U					✓												118	ARS							
274	CABLE, R-ER-901	RG-199/U					✓												119	ARS							
275	CABLE, R-ER-700, 700A	SUPERIOR-WT-FPA, 50PR. #19 AWG					✓												120	ARS							
276	CABLE, R-ER-800	NSN6145-00-910-6639-1					✓												121	ARS							
277	CABLE, R-ER-801	#2 AWG INSUL					✓												122	ARS							
278	CABLE, R-ER-802	#2 AWG BARE SOLID COUNTERPOISE					✓												123	ARS							
279	CABLE, R-ER-604	RG-59B/U					✓												124	100'							
280	CABLE, R-ER-605	RG-59B/U					✓												125	100'							
281	CABLE, R-ER-701	BELDEN 9422, 9918, 8459					✓												126	100'							
282	CABLE, R-ER-702	BELDEN 8429, 9422					✓												127	100'							
283	CABLE, R-ER-703	BELDEN 7422, 8459					✓												128	100'							
284	CABLE, R-ER-704 W904	N.W. 8822 J					✓												129	150'							
285	CABLE, R-ER-704 W904	N.W. 1916J, N.W. 1930NSJ					✓												129	150'							
286	CABLE, W903	ALPHA 2551, 3078					✓												131	100'							
287	CONNECTOR	656296101RSIG1 RADIATION INST.				✓													132	1							
288	CONNECTOR	M39012-01-0008				✓													133	4							
289	CONNECTOR	M39012-16-0013				✓													134	10							
290	CONNECTOR		MS-3116F-10-6S			✓													135	2							
291	CONNECTOR		MS-3106A-10SL-3S			✓													136	1							
292	CONNECTOR	656296102RSIG2 RADIATION INST.				✓													137	1							
293	CONNECTOR		MS-3102R-28-21P			✓													138	1							
294	CONNECTOR		MS-3102R-28-21PW			✓													139	1							
295	CONNECTOR		MS-3102R-28-21PX			✓													140	1							
296	CONNECTOR	M39012-19-0014				✓													141	21							
297	CONNECTOR	M39012-19-0013					✓												142	2							
298	CONNECTOR	M39012-01-0004					✓												143	2							
299	CONNECTOR	UG-333B/U		B-R			✓												144	1							
300	CONNECTOR	UG-495/U		B-R			✓												145	1							
301	CONNECTOR		MS-3106A-28-18P				✓												146	1							
302	CONNECTOR		MS-3116P-14-15S				✓												147	4							
303	CONNECTOR		MS-3106A-24-11S				✓												148	1							
304	CONNECTOR, SL-78, 70 NF (8)	CABLEWAVE B-73459					✓												149	10	8	10					
305	ADAPTER, COAXIAL, N TO HN ADAPTER	UG-1108/U					✓												150								
306	CONNECTOR	UG-94A/U					✓												151	10	9	10					
307	CONNECTOR, TEE, BNC	UG-274B/U					✓												152	1							
308	CABLE, R-RC-500 W905	NATIONAL NTP 720J					✓												155	AR							
309	CABLE, R-RC-501 W906						✓												156	AR							
310	CABLE, R-RC-502 W907						✓												157	AR							
311	CABLE, W3000	NW 6020SJ					✓												158	AR							
312	CABLE, W909	BELDEN 8453					✓												159	AR							
313	CABLE, R-ER-803	RG-59B/U					✓												160	AR							
314	CABLE, R-ER-804	RG-59B/U					✓												161	AR							
315	CABLE, R-ER-805	RG-59B/U					✓												162	AR							
316	CABLE, R-ER-806	RG-59B/U					✓												163	AR							
317	CABLE, W30010	N.W. 1920SJ					✓												164	AR							
318	CABLE, W30011	N.W. 4820SJ					✓												165	AR							
319	CABLE, W60095	RG-59B/U					✓												166	AR							
320	CABLE, W60096	RG-59B/U					✓												167	AR							
321	CABLE, W60018	RG-11A/U					✓												168	AR							
322	CABLE, W60019	RG-11A/U					✓												169	AR							
323	CABLE, W1000	BELDEN 19206					✓												170	AR							
324	ENCLOSURE, 36" X 30" X 10"	HOFFMAN A-363010		GALV STEEL																	1	1					
325	ANGLE, 2" X 2" X 3/16"																				2	144"					
326	TERMINAL ADAPTER FOR PVC 3 1/2"																				6	3					
327	ANGLE, ALUMINUM, 4" X 2" X 8"																				7	20"					
328																											
329	CABLE RACK	JOSLYN MFG CO J5126																			10	A/R					
330	FLAT BAR, 1/4" X 1 1/2" STEEL																				13	10'					
331	PLATE, ALUMINUM, 40" X 16" X 1/4"																				14	1					
332	3/8" PLASTIC TUBING KIT	CABLEWAVE 913348																			15	5					
333	CABINET, ELECTRICAL EQUIPMENT	CY-597																			16	1					
334																					17	2					
335																					18	1					
336	DEHYDRATOR W/LOW PRESS ALARM	CABLEWAVE APD-130																			19	A/R					
337	GAS DISTRIBUTION MANIFOLD	CABLEWAVE GDM-5																									
338	TEFLON TAPE	CABLEWAVE 920191																									
339	SCREW, THREAD FORMING	T.I. 707197-11				✓							47	2													
340	STRAP, CONDUIT, EMT	T.I. 714631-4				✓							48	2													
341	WASHER, FLAT, 1/4"	T.I. 411027-810				✓							49	2													

REVISIONS

ZONE	SYM	DESCRIPTION	DATE	APPROVAL

1 10 20 30 40
41 50 80

STANDARD PLAN
ASR-8 RADAR
MASTER LIST OF MATERIAL AND EQUIPMENT

NAVELEX STANDARD PLAN NO.
0100802A

SIZE	CODE IDENT NO.	NAVELEXSYSCOM DRAWING NO.	REV
F			

SCALE NONE | SHEET 4 OF 5

ENCL ( ) TO NAVELEXSYSENGCEN/CHASN LTR SER OF

MASTER LIST OF EQUIPMENT

ITEM	DESCRIPTION	MFG. PART NO. SERIAL NO.	STANDARD NAVY STOCK NO.	REMAKS	FURNISHED BY HQ.	E.V.	EFA	STA	0100804 ITEM	0100804 QTY	0100805 ITEM	0100805 QTY	0100806 ITEM	0100806 QTY	0100807 ITEM	0100807 QTY	0100808 ITEM	0100808 QTY	0100809 ITEM	0100809 QTY	0100810 ITEM	0100810 QTY	0100812 ITEM	0100812 QTY	ITEM	QTY	TOTAL
1	TRANSMITTER					✓							1	2													
2	RECEIVER					✓							2	2													
3	PROCESSOR					✓							3	2													
4	MAINTENANCE P.P.I. (PORTABLE)					✓							4	1													
5	KLYSTRON CADDY (PORTABLE)					✓							5	1													
6	RM. A CABLE JUNCTION BOX					✓							6	1													
7	ANTENNA DISTRIBUTION PANEL					✓							7	1													
8	ELECTRONIC DISTRIBUTION PANEL RM. A					✓							8	1													
9	24V PREREGULATOR					✓							9	1													
10	MAIN DISTRIBUTION PANEL					✓							10	1													
11	A.C. PROTECT					✓							11	1													
12	RM. A HOUSE DISTRIBUTION					✓							12	1													
13	RM. B CABLE JUCTION BOX					✓							13	1													
14	BLDG. ALARM/CHANNEL ALARM					✓							14	1													
15	ELECTRONIC DISTRIBUTION PANEL RM. B					✓							15	1													
16	24 V PREREGULATOR					✓							16	1													
17	A.C. JUNCTION BOX					✓							17	1													
18	RM. B HOUSE DISTRIBUTION PANEL					✓							18	1													
19	WAVEGUIDE PRESSURIZATION SYSTEM & RESERVOIR					✓							19	1													
20	CO_2 FIRE EXTINGUISHER					✓							20	4													
21	WAVEGUIDE SWITCH A					✓							21	1													
22	WAVEGUIDE SWITCH B					✓							22	1													
23	MASTER INTERCOM UNIT					✓							23	1													
24	TRANSMITTER, COOLING UNIT					✓							24	2													

REVISIONS

ZONE	SYM	DESCRIPTION	DATE	APPROVAL

REFERENCE:

F-28687-0100806 STANDARD PLAN ASR-8 RADAR SHELTER, ARRANGEMENT OF EQUIPMENT

STANDARD PLAN
ASR-8 RADAR
DRAWING INDEX AND GENERAL NOTES

NAVELEX STANDARD PLAN NO.
0100802A

SIZE	CODE IDENT NO.	NAVELEXSYSCOM DRAWING NO.	REV.
F			
SCALE NONE		SHEET 5 OF 5	

ENCL ( ) TO NAVELEXSYSENGCEN, CHASN LTR SER OF

REVISIONS				
ZONE	SYM	DESCRIPTION	DATE	APPROVAL
	A	CHANGED NOTE 6.	12-80	

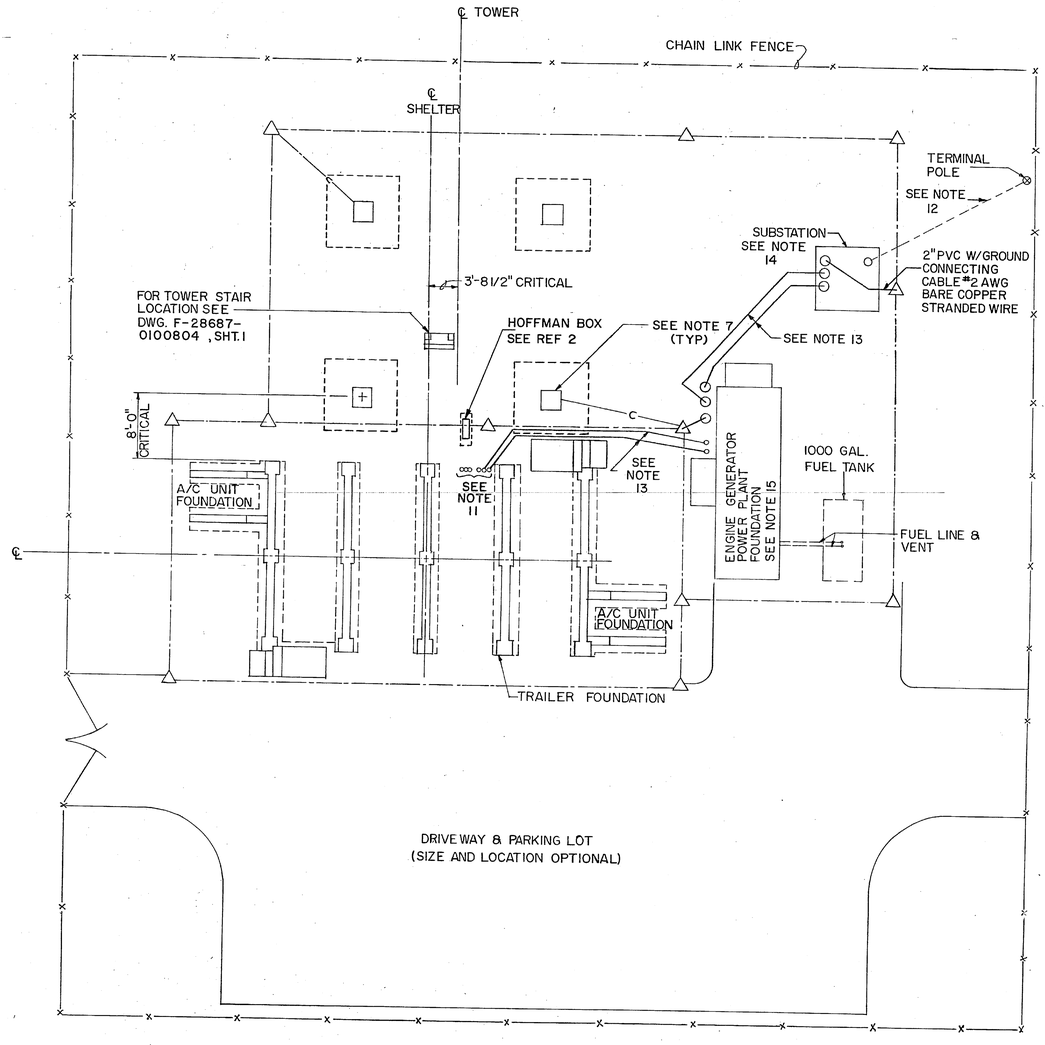

TYPICAL SITE PLAN
NOT TO SCALE

NOTES CONTINUED

12. COMMERCIAL POWER SERVICE TERMINAL POLE SHALL BE 1000 FT. FROM TOWER. FOR TOWER HEIGHTS LESS THAN 27 FT. IN HEIGHT, BURIED CABLE SHALL BE USED FROM THE TERMINAL POLE TO THE SUBSTATION. IN NO CASE SHALL ABOVE GROUND POWER SERVICE LINES (WITHIN 1000 FT. RADIUS FROM THE RADAR TOWER) EXTEND ABOVE THE ELEVATION OF THE ANTENNA PLATFORM.
13. INSTALL 2-2-1/2" RIGID STEEL CONDUIT WITH 4-2/0 AWG STRANDED COPPER WIRE, TYPE RHW, EACH CONDUIT. MAXIMUM LENGTH OF 2/0 CABLE BETWEEN SUB STATION TO ASR-8 SHELTER IS 400'.
14. SUB STATION IS NORMALLY FURNISHED BY COMMERCIAL POWER COMPANY. A METAL CLAD SUB STATION, 112-1/2 KVA, 3Ø, 120/208 V IS REQUIRED.
15. AN EMERGENCY POWER ENGINE GENERATOR POWER PLANT OF 75 KW CAPACITY IS REQUIRED. THE SIZE OF FOUNDATION FOR THE POWER PLANT WILL DEPEND ON THE RELATIVE SIZE AND TYPE OF BUILDING CONSTRUCTED FOR THE POWER PLANT.

NOTES

1. BUILDING/TOWER AND FOUNDATION/CABLE RELATIONSHIPS ARE CRITICAL AND MUST BE INSTALLED AS SHOWN. ALSO, RELATIVE TOP ELEVATION OF TOWER PIERS AND BUILDING AND A/C FOUNDATIONS MUST BE MAINTAINED FOR WAVEGUIDE AND POWER INTERFACES. ASSUME GROUND ELEVATION ℄ BUILDING IS 100.00.
2. DRIVEWAY AND PARKING AREA AS WELL AS GATES AND FENCE REQUIREMENTS SHALL BE SITE ADAPTED. IF FENCE IS REQUIRED, DISTANCE FROM THE TOWER AND THE BUILDING SHALL ALLOW ROOM FOR VEHICULAR TRAFFIC TO SERVICE TOWER AND ANTENNA. (70' MIN. TURNING RADIUS FOR TRUCKS).
3. GRAVEL OR CRUSHED STONE SHALL BE PROVIDED AROUND POWER PLANT, SUBSTATION, AND UNDER TOWER AND SHELTER. THE TOTAL AREA WITHIN THE FENCE LINE SHALL BE STERILIZED WITH A CHEMICAL SOIL STERILIZER TO COMPLETELY ELIMINATE VEGETATION. THE METHOD OF APPLICATION SHALL COMPLY WITH MANUFACTURERS SPECIFICATIONS.
4. A SURFACED WALKWAY SHALL BE PROVIDED FROM THE REAR ENTRANCE TO THE TOWER STAIRWAY AND TO THE POWER PLANT.
5. RADAR DATA AND CONTROL CABLES SHALL BE DIRECT EARTH BURIED EXCEPT WHEN ROUTED UNDER ROADWAYS, TAXIWAYS, RUNWAYS, OR PARKING AREAS WHERE THEY MUST BE PROTECTED WITH CABLE DUCTS OR STEEL CONDUIT. TERMINATION OF CABLE DUCTS OR CONDUIT SHALL BE AS SHOWN ON REF. 2, SHT. 4.
6. THE #4/0 AWG BARE STRANDED COPPER GROUNDING COUNTERPOISE WIRE AND 3/4" X 10'-0" GROUND RODS SHALL BE INSTALLED AS SHOWN ON THIS DRAWING. THE COUNTERPOISE SHALL BE INSTALLED A MINIMUM OF TWO FEET BELOW FINISHED GRADE. ALL CONNECTIONS TO THE COUNTERPOISE SHALL BE #2 AWG BARE COPPER WIRE AND SHALL BE EXOTHERMIC WELDED OR EQUIVALENT. LENGTH OF BURIED COUNTERPOISE WIRE MAY VARY AT EACH SITE DEPENDING ON LOCATION OF AUXILARY EQUIPMENT & BUILDINGS.
7. PVC AND RIGID STEEL CONDUIT SWEEPS THROUGH SLAB SHALL EXTEND 3" ABOVE GROUND SURFACE TO PROTECT CABLE AND SHALL BE PLUGGED UNTIL READY TO USE.
8. FOUNDATION EXCAVATION TO BE DONE CAREFULLY SO THAT BUILDING FOUNDATIONS WILL REST ON UNDISTURBED EARTH. NECESSARY PRECAUTIONS ARE TO BE TAKEN BY CONTRACTOR.
9. LOCATION OF EQUIPMENT OTHER THAN THE TOWER AND BUILDING FOUNDATION WILL BE LOCATED AS REQUIRED AT EACH SITE.
10. DIRECTION OF CABLES TO BE BURIED ON LEAVING ASR-8 TRAILER WILL VARY ACCORDING TO LOCATION OF AXUILARY EQUIPMENT & BUILDING.
11. FOR ADDITIONAL DETAILS SEE REFERENCE 2.

(NOTES CONTINUED)

LEGEND

- —x—x— CHAIN LINK FENCE (TYPE AS REQUIRED AT EACH SITE)
- ——— GROUNDING COUNTERPOISE, 4/0 AWG BARE STRANDED COPPER WIRE.
- △ GROUNDING ROD, 3/4" X 10'-0"
- —c— GROUND CONNECTING CABLE, #2 AWG BARE STRANDED COPPER WIRE.
- ⊗ POWER POLE

NO.	REFERENCES	DRAWING NO.
2	ASR-8 RADAR SHELTER, FOUNDATION PLAN AND DETAILS	F-28687-0100804
1	ASR-8 RADAR, DRAWING INDEX AND GENERAL NOTES	F-28687-0100801

NAVELEX STANDARD PLAN NO. 0100803A

NAVAL ELECTRONIC SYSTEMS COMMAND

GENERAL SERVICE — FOR SHORE USE

STANDARD PLAN
ASR-8 RADAR
TYPICAL SITE PLAN

DRAFTSMAN	PROJ. ENG
CHECKED	SPONSOR
ACO ENGR	SECT. HEAD
APPROVED DATE	
APPROVED DATE	
SATISFACTORY TO: ACTIVITY DATE	

SIZE F | CODE IDENT NO. | REV. A
SCALE NONE | SHEET 1 OF 1

ENCL ( ) TO NAVELEXSYSENGCEN, CHASN LTR SER OF

GND MESEC-CHAS 11010-3 REV. (1-74) K of 10 153 8-75 3185+ CAROLINA E of P-443

REVISIONS				
ZONE	SYM	DESCRIPTION	DATE	APPROVAL
	A	ADDED NOTE TO TOWER FOUNDATION, SH 1. REVISED SECTION "A-A", "B-B" & "F-F", SH 3. REVISED SECTION "G-G", VIEW "G" & HAND RAIL DETAIL, SH 4.	12-80	

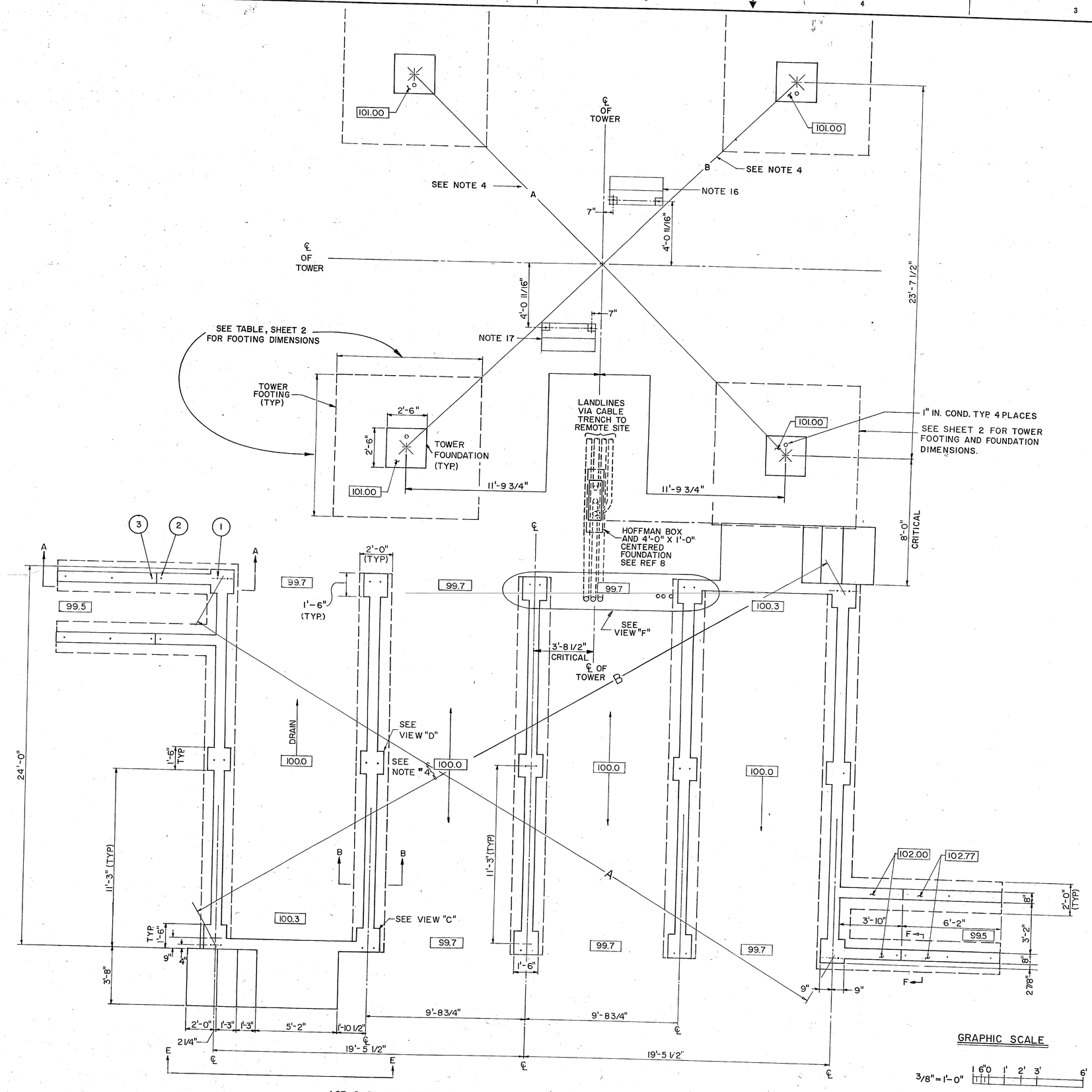

ASR-8 TRANSPORTABLE BUILDING FOUNDATION PLAN VIEW
SCALE- 3/8" = 1'-0"

GRAPHIC SCALE
3/8" = 1'-0"
1 6" 0 1' 2' 3' 6'

NOTES:

1. CONSTRUCTION TOLERANCES:
   UP TO 1' ± 1/8"
   OVER 1' ± 1/4"
2. CRITICAL ELEVATIONS: ASSUMING GROUND ELEV. 100.0
   TOP OF TOWER PEDESTAL 101.0
   TOP OF FOUNDATION WALL 102.0
   TOP OF FOUNDATION WALL 102.77
   GRADE SHOWN AS 100.0
3. TOP OF FOUNDATION TO TOP OF FOOTING TO BE 5'-0" MIN. TOP OF FOOTING TO BE 6" BELOW FROST LINE, HEIGHT OF FOUNDATION TO BE ADJUSTED AT EACH SITE LOCATION.
4. DIMENSION "A" MINUS "B" NOT TO EXCEED 3/4"
5. ALL EXPOSED STEEL PARTS SHALL BE HOT DIP GALVANIZED PER ASTM A123.
6. DESIGNED FOR SOIL PRESSURE OF 4000 LB/SQ FT.
7. CHAMFER ALL EXPOSED CONCRETE CORNER 1".
8. ALL ANCHOR BOLTS AND OTHER HARDWARE TO BE GALVANIZED PER ASTM A153.
9. FOOTING DESIGNED FOR AN UPLIFT SAFETY FACTOR OF 2. MAXIMUM BEARING PRESSURE AS INDICATED IN TABLE, SHT. 2.
10. ALL MAIN REINFORCING TO HAVE 4" MIN. CONCRETE COVERING.
11. ALL MAIN FOOTING REINFORCING EQUALLY SPACED AND TO HAVE 180° STD. HOOKS.
12. ALL MAIN PIER REINFORCING TO HAVE 90° STANDARD HOOKS ON ONE END.
13. FOR GROUNDING DETAILS SEE REF. 6, SHT. 3.
14. FOUNDATION EXCAVATION TO BE DONE CAREFULLY SO THAT BUILDING FOUNDATIONS WILL REST ON UNDISTURBED EARTH. NECESSARY PRECAUTIONS ARE TO BE TAKEN BY CONTRACTOR AS DIRECTED BY GOVERNMENT REPRESENTATIVE.
15. USE WET CONDITION WHERE GROUND WATER MAY RISE ABOVE BOTTOM OF FOUNDATION. WET CONDITION DESIGNED FOR GROUND WATER AT GRADE, WITH 2/3 FULL HYDROSTATIC PRESSURE.
16. STAIR PIER LOCATION FOR 37', 57', & 77' TOWER.
17. STAIR PIER LOCATION FOR 27', 47', & 67' TOWER.

NO.	REFERENCES	DRAWING NO.
9	ASR-8 RADAR SHELTER OFFLOADING & ERECTION	F-28687-0100805
8	ASR-8 RADAR CABLE PRESSURIZATION DETAILS	F-28687-0100812
7	FAA DWG FOR ASR-4 THRU ASR-7 TOWERS	FAA D-5419
6	ASR-8 RADAR TOWER ELECTRICAL PLAN	F-28687-0100808
5	AMERICAN SOCIETY FOR TEST AND MATERIAL	ASTM A153
4	AMERICAN SOCIETY FOR TEST AND MATERIAL	ASTM A123
3	DATA SHEET FOR SITE PREPARATION CHECK LIST, AIRPORT SURVEILLANCE RADAR MODEL ASR-8	A-96214-870536
2	CHECK LIST, SITE PREPARATION AIRPORT SURVEILLANCE RADAR MODEL ASR-8 TYPE FA-9335	A-96214-870535
1	PRELIMINARY INSTRUCTION BOOK FOR AIRPORT SURVEILLANCE RADAR, MODEL ASR-8, TRANSPORTABLE BUILDING, VOLUME VIII	TI-6310.13

NAVELEX STANDARD PLAN NO. 0100804A

NAVAL ELECTRONIC SYSTEMS COMMAND

GENERAL SERVICE — FOR SHORE USE

STANDARD PLAN
ASR-8 RADAR
SHELTER FOUNDATION PLAN AND DETAILS

DRAFTSMAN	PROJ ENG
CHECKED	SPONSOR
ACO ENGR	SECT. HEAD
APPROVED	DATE
APPROVED	DATE
SATISFACTORY TO:	DATE
ACTIVITY	DATE

SIZE	CODE IDENT NO.	NAVELEXSYSCOM DRAWING NO.	REV.
F			

SCALE AS SHOWN — SHEET 1 OF 4

ENCL ( ) TO NAVELEXSYSENGCEN, CHASN LTR SER OF

GND NESEC-CHAS 9202-3 REV. (1-74) Kodak 19153 9-75 3185+ CAROLINA Ref P-443

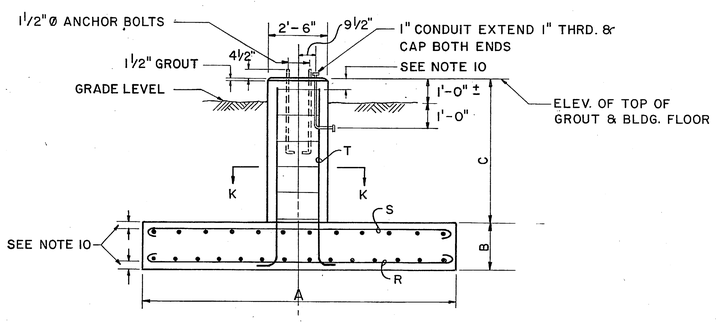

FOOTING ELEVATION

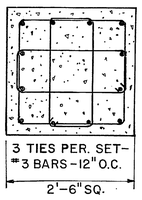

HEIGHTS-57,67,77

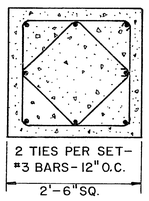

HEIGHTS-17,27,37,47

SECTION "K-K"

TOWER HEIGHT	FOOTING DIMENSIONS							
	DRY CONDITION				WET CONDITION			
	A	B	C	MAX. TOE PRES.	A	B	C	MAX. TOE PRES.
27'	7'-0"	1'-6"	4'-6"	2000	8'-0"	1'-6"	3'-6"	1500
37'	8'-0"	1'-6"	4'-6"	1900	9'-0"	1'-6"	4'-0"	1500
47'	9'-0"	1'-6"	5'-6"	2100	10'-6"	1'-6"	5'-0"	1500

SEE NOTE 15

SEE REF. NO. 7 FOR 57', 67' & 77' TOWER FOOTINGS

TOWER HEIGHT	FOOTING REINFORCING STEEL							
	DRY CONDITION				WET CONDITION			
	R*	S*	T			R*	S*	T
27'	5-#4	NONE	8-#5			6-#4	NONE	8-#5
37'	7-#4	NONE	8-#6			10-#4	NONE	8-#6
47'	11-#4	7-#4	8-#8			14-#4	8-#4	8-#8

* QUANTITIES SHOWN ARE NUMBER OF BARS EACH WAY

SEE REF. NO. 7 FOR 57', 67' & 77' TOWER FOOTINGS

TOWER FOOTING AND FOUNDATION REQUIREMENTS
NOT TO SCALE

LIST OF MATERIAL

ITEM NO.	QTY	DESCRIPTION	GOVT OR COML DESIGNATION	REMARKS		FURN BY H.Q.	E.V.	E.F.A.	STA.
1	30	BOLTS ½"Ø X 9¼"		SEE VIEW "C"				✓	
2	4	BOLTS 3/8" Ø X 13"		SEE SECTION "A-A"				✓	
3	12	BOLTS 3/8" Ø X 9½"		SEE SECTION "A-A"				✓	
4	A/R	CONDUIT 3½"		SEE VIEW "F"				✓	
5	A/R	CONDUIT (PVC) 2"		SEE VIEW "F"				✓	
6	A/R	CONDUIT 2½"		SEE VIEW "F"				✓	
7	2	INTERMEDIATE HANDRAIL 2'-7½"		SEE HANDRAIL DET.				✓	
8	2	INTERMEDIATE HANDRAIL 2'-6½"		SEE HANDRAIL DET.				✓	
9	2	INTERMEDIATE HANDRAIL 3'-6½"		SEE HANDRAIL DET.				✓	
10	A/R	#4 REBAR						✓	
11	A/R	1½" SCH. 40 PIPE 7"						✓	
12	12	GUARD RAIL MOUNTING PLATE		SEE VIEW "G"				✓	
13	12	2" SCH. 40 PIPE 7"		SEE VIEW "H"				✓	
14	12	BOLT 3/8" Ø X 3"						✓	
15	12	WASHER, FLAT 3/8"						✓	
16	12	LOCKWASHER 3/8"						✓	
17	12	NUT 3/8"						✓	
18	12	BOLT 5/16"						✓	
19	12	WASHER, FLAT						✓	
20	12	LOCKWASHER						✓	
21	12	NUT						✓	
22	10	ANGLE					✓		
23	20	ANGLE					✓		
24	20	NUT					✓		
25	20	WASHER, LOCK					✓		
26	20	WASHER, LOCK					✓		
27	10	PLATE					✓		
28	10	OUTBOARD TIE-DOWN PLATE					✓		
29	5	INBOARD TIE-DOWN PLATE					✓		
30	20	SHIM PLATE (OUTBOARD TIE-DOWN)					✓		

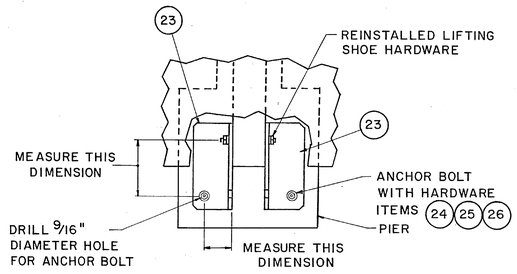

OUTBOARD TIEDOWN

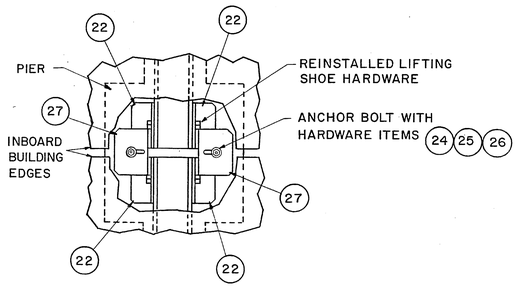

INBOARD TIEDOWN

RUF*NEK BUILDING TIEDOWN DETAILS
NO SCALE

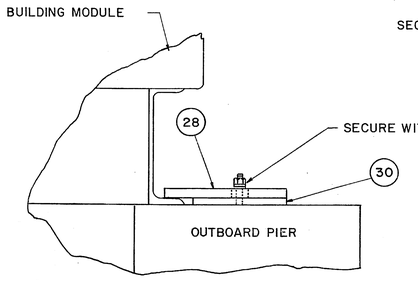

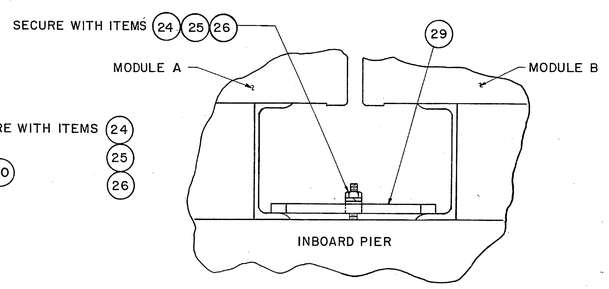

T.I. BUILDING TIEDOWN DETAILS
NO SCALE

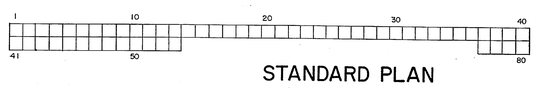

STANDARD PLAN

ASR-8 RADAR

SHELTER FOUNDATION PLAN AND DETAILS

NAVELEX STANDARD PLAN NO.
0100804A

SIZE	CODE IDENT NO.		REV.
F			

SCALE: NONE SHEET 2 OF 4

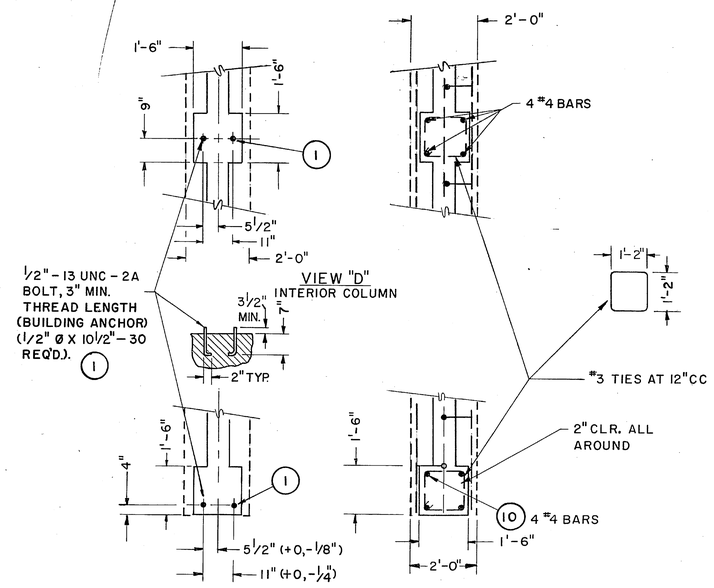

VIEW "C"
EXTERIOR COLUMN
NOT TO SCALE

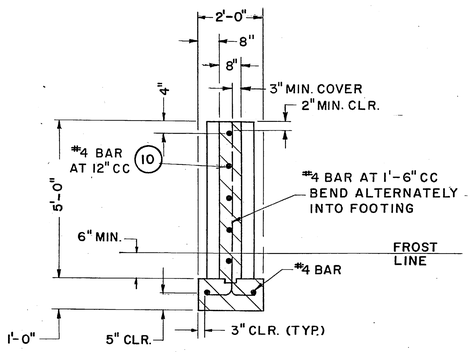

SECTION B-B
FOUNDATION WALL AND FOOTING
NOT TO SCALE

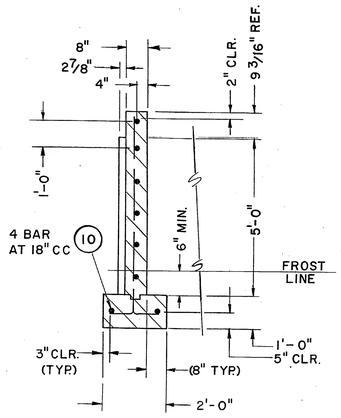

SECTION F-F
A/C FOUNDATION WALL
NOT TO SCALE

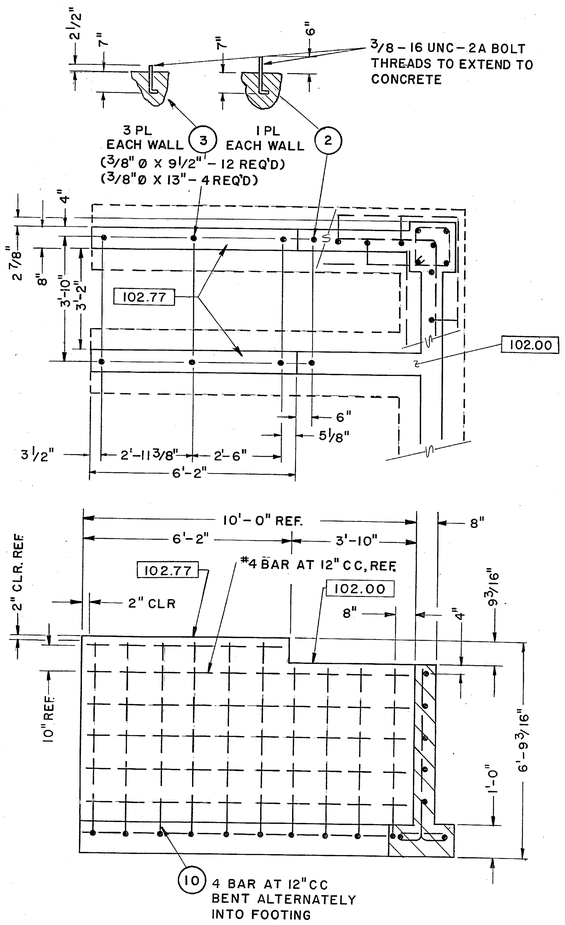

SECTION A-A
A/C FOUNDATION WALL AND FOOTING
NOT TO SCALE

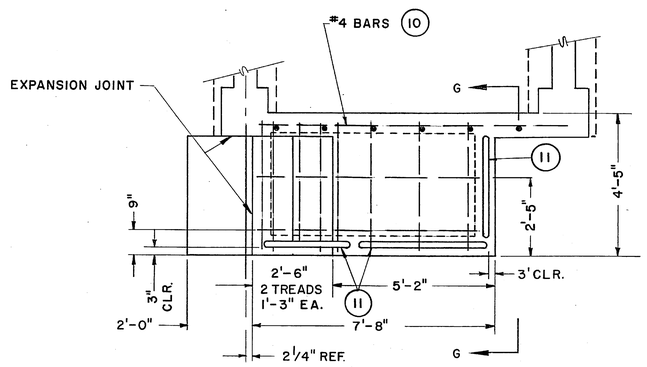

SECTION J-J
STAIRWAY PLAN VIEW
NOT TO SCALE

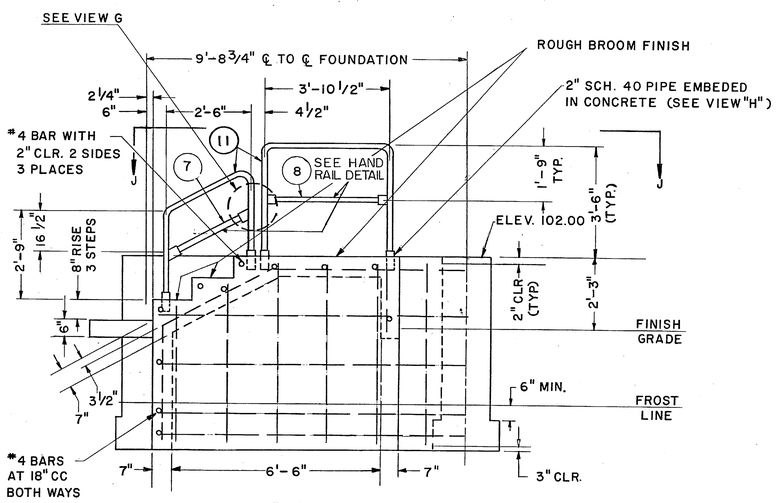

SECTION E-E
STAIRWAY ELEVATION
NOT TO SCALE

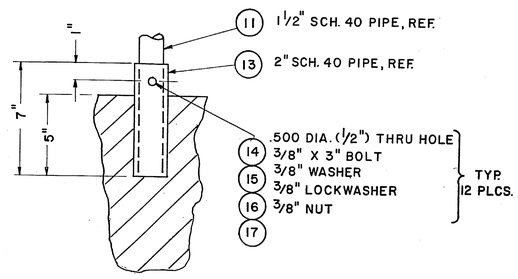

VIEW "H"
RAILING SLEEVE
NOT TO SCALE

STANDARD PLAN

ASR-8 RADAR

SHELTER FOUNDATION PLAN AND DETAILS

NAVELEX STANDARD PLAN NO.
0100804A

SIZE	CODE IDENT NO.	NAVELEXSYSCOM DRAWING NO.	REV.
F			
SCALE NONE		SHEET 3 OF 4	

K&E 10 153 5-74 W2848 • CAROLINA E&F P-393 • 6ND-NESEC. CHAS-11010-2

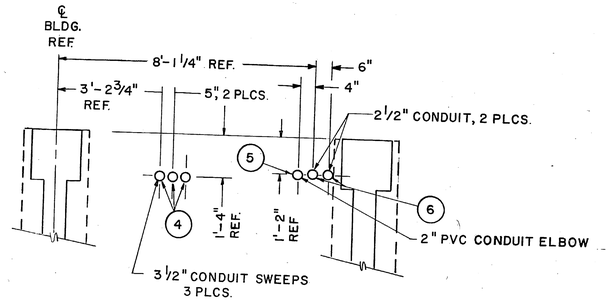

VIEW "F"
(FOR ELEVATION SEE REF 8 & 9
NOT TO SCALE

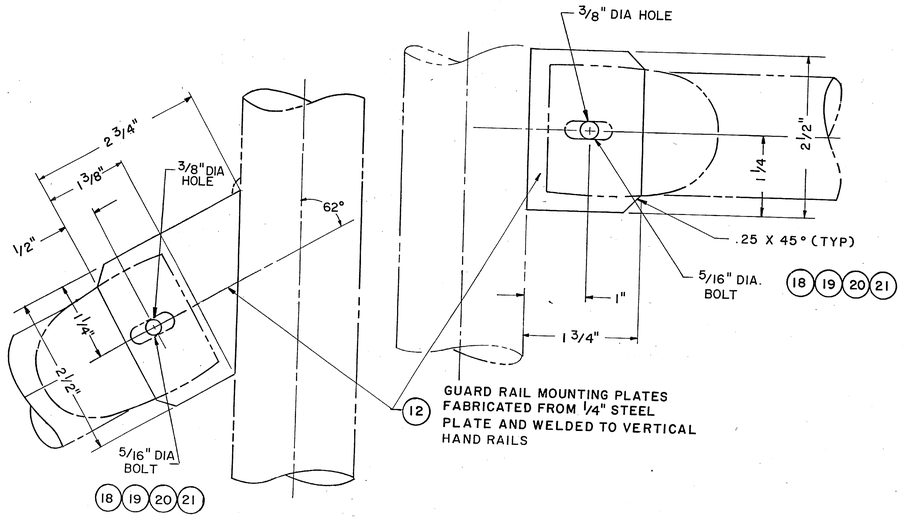

VIEW G
NOT TO SCALE

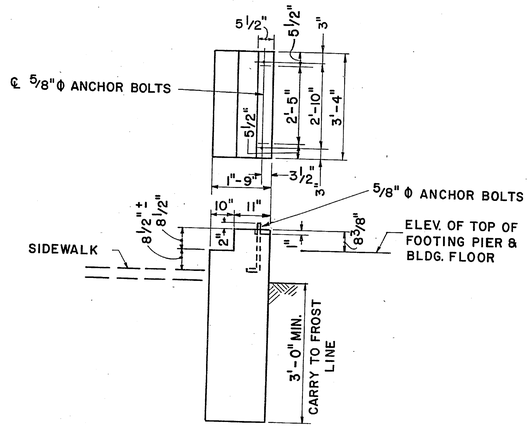

STAIR PIER
NOT TO SCALE

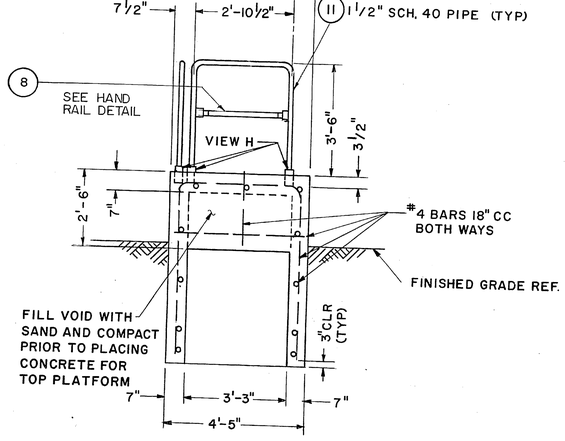

SECTION "G-G"
STAIRWAY END VIEW
NOT TO SCALE

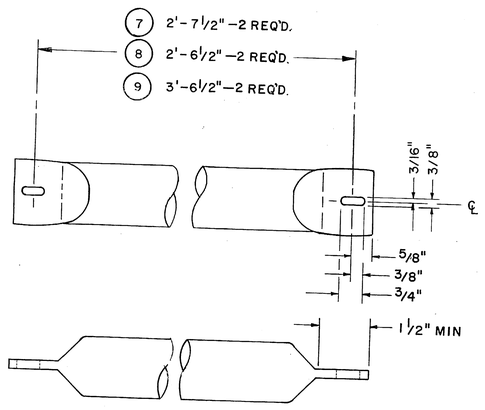

HAND RAIL DETAILS
INTERMEDIATE RAIL
(1 1/2" SCH. 40 PIPE)
NOT TO SCALE

STANDARD PLAN
ASR-8 RADAR
SHELTER FOUNDATION PLAN AND DETAILS

NAVELEX STANDARD PLAN NO.
0100804A

SIZE	CODE IDENT NO.	NAVELEXSYSCOM DRAWING NO.	REV.
F			
SCALE NONE		SHEET 4 OF 4	

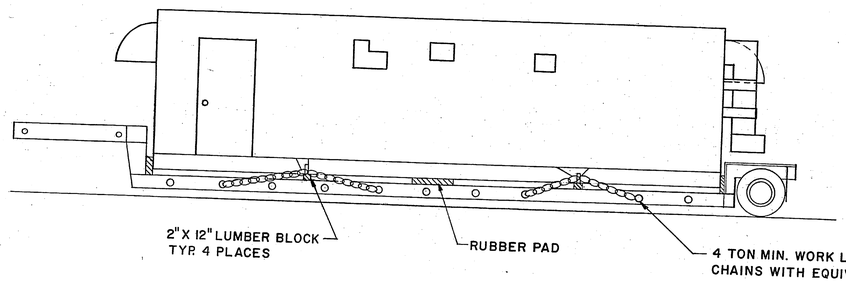

TRANSPORTABLE BUILDING ON TRAILER
NOT TO SCALE

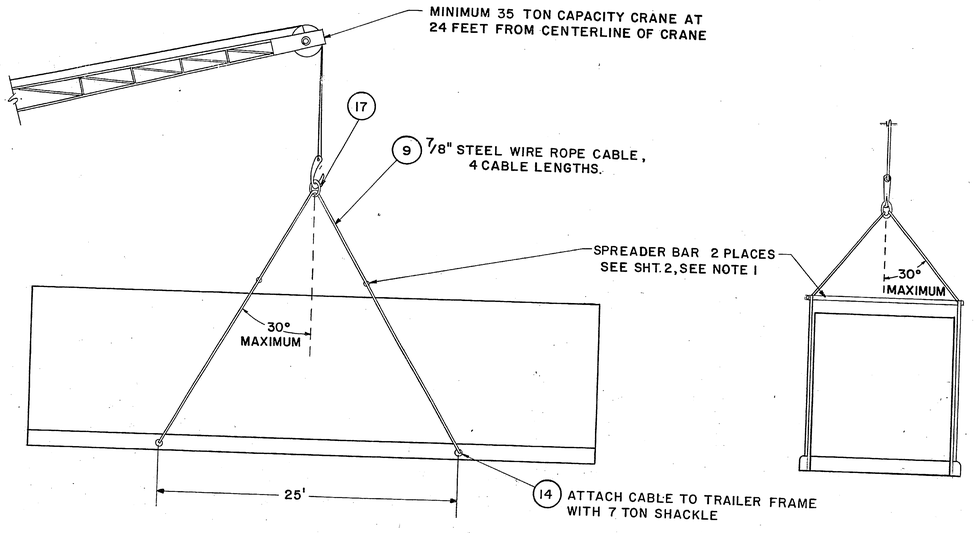

CRANE LIFTING CONFIGURATION
NOT TO SCALE
(SEE NOTE 2)

LIST OF MATERIAL

ITEM NO.	QTY	DESCRIPTION	GOVT OR COML DESIGNATION	REMARKS	FURN BY H.Q.	FURN BY E.V.	FURN BY E.F.A.	FURN BY STA.
1	2	END PIECE					✓	
2	1	CENTER PIECE					✓	
3	2	SPLICE TUBE					✓	
4	2	CLIP HOLDER					✓	
5	2	END PLATE					✓	
6	2	AIR MIXING CHAMBER COVER (3' X 1'-6")					✓	
7	2	AIR CONDITIONING SUPPLY COVER (1' X 3')				✓		
8	4	EMERGENCY AIR EXHAUST LOUVER (26" X 25")				✓		
9	100'	7/8" STEEL WIRE ROPE				✓		
10	1	BEACON OPENING (8" X 8")		QUANTITY VARIES			✓	
11	1	WAVE GUIDE COVER (1'-6" X 8")				✓		
12	2	ELECTRICAL WIRE COVER (1' X 1')				✓		
13	2	WAVE GUIDE COVER (1' X 3')				✓		
14	4	7 TON SHACKLE (ROUND PIN ANCHOR)				✓		
15	2	STRUCTURAL PLUG COVER (24' X 7')					✓	
16	2	7/8" WIRE ROPE CLIP				✓		
17	1	STEEL RING (22 TON LIFT CAPACITY)					✓	
18	1	1/2" CONDUIT BUSHING		2 3/4" DIA.			✓	
19	2	2 1/2" CONDUIT BUSHING					✓	
20	2	2 1/2" CONDUIT LOCK NUT					✓	
21	1	1/2" CONDUIT LOCK NUT					✓	
22	1	1/2" CONDUIT STUFFING TUBE					✓	
23	4	2 1/2" CONDUIT ADAPTER					✓	
24	2	2 1/2" FLEXIBLE STEEL CONDUIT					✓	
25	4	3 1/2" CONDUIT BUSHING		H/D GALV.			✓	
26	4	3 1/2" CONDUIT LOCK NUT					✓	
27	8	3 1/2" CONDUIT ADAPTER					✓	
28	4	3 1/2" FLEXIBLE STEEL CONDUIT		H/D GALV.			✓	

ZONE	SYM	REVISIONS DESCRIPTION	DATE	APPROVAL
	A	CHANGED CRANE CAPACITY, SH 1.	12-80	

NOTES:

1. ASR-8 SHELTER TO BE ERECTED IN ACCORDANCE WITH REF. 2.
2. 24' STRUCTURAL COVER PLUG ON INBOARD WALL NOT TO BE REMOVED BEFORE CRANE LIFTING.
3. ENSURE TEMPORARY SHIPPING COVERS ON INBOARD SIDE OF EACH BUILDING ARE REMOVED BEFORE PLACING BUILDING IN THEIR FINAL SETTING.
4. IF SPREADER BAR IS NOT AVAILABLE AT OFF LOADING TIME, CONTRACTOR TO MANUFACTURE SPREADER BAR AS INDICATED.
5. WHEN LEVELING TRANSPORTABLE BUILDING ON FOUNDATION, A MIN. OF TWO MARKS PER WALL PER BUILDING SHALL BE USED. VERTICAL DISPLACEMENT BETWEEN BUILDINGS SHALL BE 0.125" MAX..
6. RECORD DATA IN ACCORDANCE WITH REF. 5.
7. WITH BUILDINGS IN FINAL POSITION ENSURE THE FOLLOWING:
   LONGITUDINAL AXIS - 130.4"
   DIPLEXER SEPERATION - 50"

LEGEND:

- WELD JOINT (BOTH SIDE)
- WELD JOINT
- WELD JOINT (ALL-AROUND)

GRAPHIC SCALES

1/4" = 1"
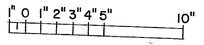

1/2" = 1"
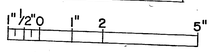

1" = 1"
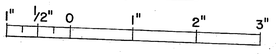

NO	REFERENCES	DRAWING NO.
5	INVENTORY, EQUIPMENT, AIRPORT SURVEILLANCE RADAR MODEL ASR-8, TYPE FA-9335	A-96214-870569
4	DATA SHEET, ACCEPTANCE TEST, FIELD INSTALLATION TEST CHECK LIST, AIRPORT SURVEILLANCE RADAR, MODEL ASR-8, TYPE FA-9335	A-96214-886420
3	TEST PROCEDURE, FIELD INSTALLATION TEST, AIRPORT SURVEILLANCE RADAR MODEL ASR-8, TYPE FA-9335	A-96214-886419
2	PRELIMINARY INSTRUCTION BOOK FOR AIRPORT SURVEILLANCE RADAR MODEL ASR-8 TRANSPORTABLE BUILDING, VOLUME VIII	TI-6310.13
1	ASR-8 SHELTER FOUNDATION PLAN AND DETAILS	F-28687-0100804

NAVELEX STANDARD PLAN NO. 0100805A

NAVAL ELECTRONIC SYSTEMS COMMAND

GENERAL SERVICE — FOR SHORE USE

STANDARD PLAN
ASR-8 RADAR
SHELTER OFFLOADING AND ERECTION PLAN

DRAFTSMAN	PROJ ENG
CHECKED	SPONSOR
ACQ ENGR	SECT. HEAD
APPROVED	
APPROVED	
SATISFACTORY TO:	
ACTIVITY	

SIZE: F | CODE IDENT NO. | NAVELEXSYSCOM DRAWING NO. | REV.

SCALE: AS SHOWN | SHEET 1 OF 4

ENCL ( ) TO NAVELEXSYSENGCEN, CHASN LTR SER OF

ND NESEC-CHAS-11010-3 REV. (8-75) K&E 19 1153 8-76 CO3589 CAROLINA E&F 488

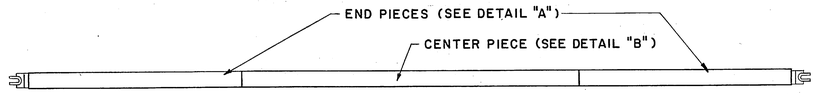

SPREADER BAR ASSEMBLY
(SEE NOTE 1)
NOT TO SCALE

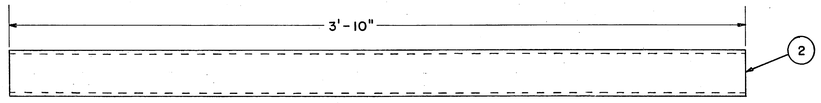

DETAIL "B" - CENTER & END PIECE
MATERIAL - 1020 CARBON STEEL ROUND MECHANICAL TUBING - 2.88" O.D., 2.50" I.D.
SCALE: 1/4"=1"

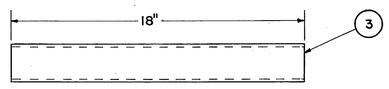

DETAIL "C" SPLICE TUBE
MATERIAL - 1020 CARBON STEEL ROUND MECHANICAL TUBING - 2.36" O.D., 2.06" I.D.

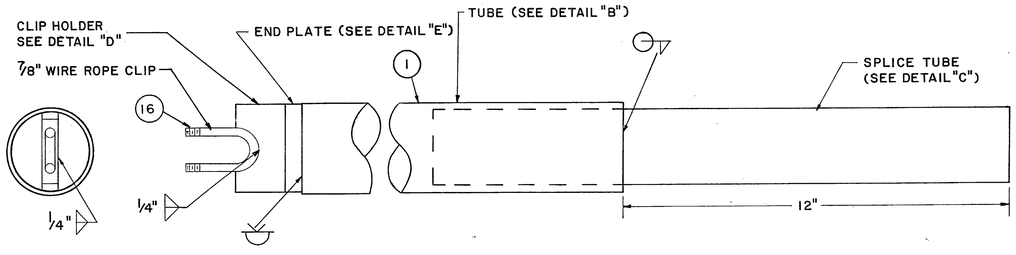

DETAIL "A" - END PIECE
SCALE: 1/2"=1"

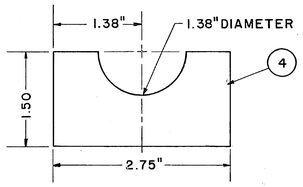

DETAIL "D" - CLIP HOLDER
MATERIAL - 1/2" X 3" C1018 STEEL BAR
SCALE: 1"=1"

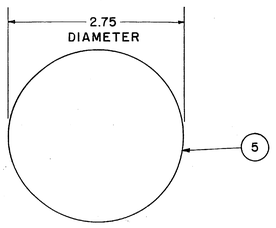

DETAIL "E" - END PLATE
MATERIAL - 1/2" X 3" C1018 STEEL BAR
SCALE: 1"=1"

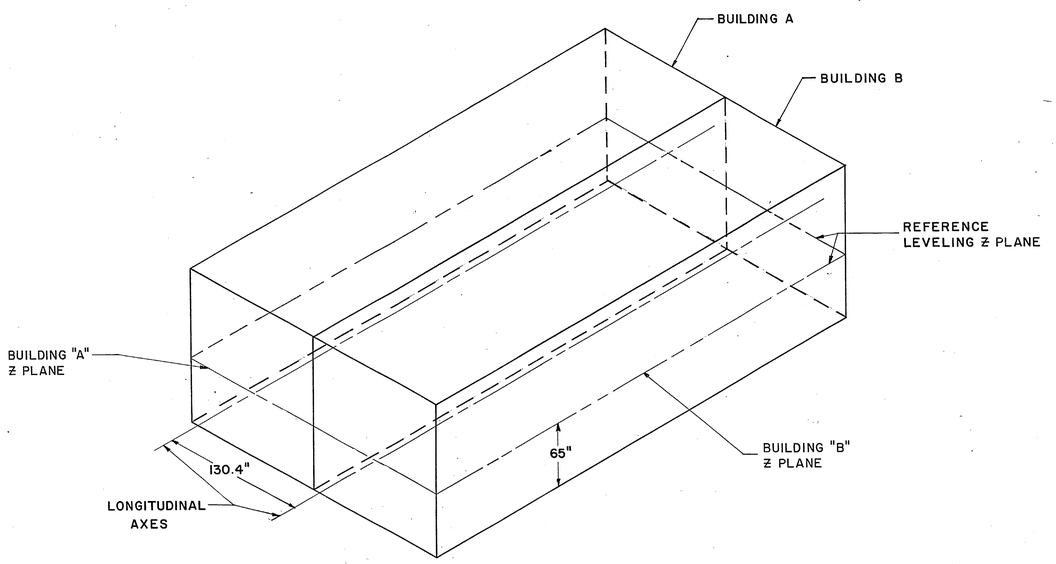

TRANSPORTABLE BUILDING AXES AND REFERENCE PLANE
SEE NOTE 3 AND 7
NOT TO SCALE

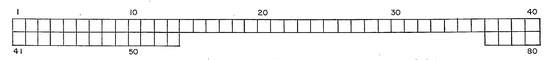

STANDARD PLAN
ASR-8 RADAR
SHELTER OFFLOADING AND ERECTION PLAN

NAVELEX STANDARD PLAN NO.
0100805A

SIZE	CODE IDENT NO.	NAVELEXSYSCOM DRAWING NO.	REV.
F			
SCALE AS SHOWN		SHEET 2 OF 4	

XAE 19 1153 S-74 W3648 • CAROLINA E&F P-303• 6ND-NESEC, CHAS-8099-2

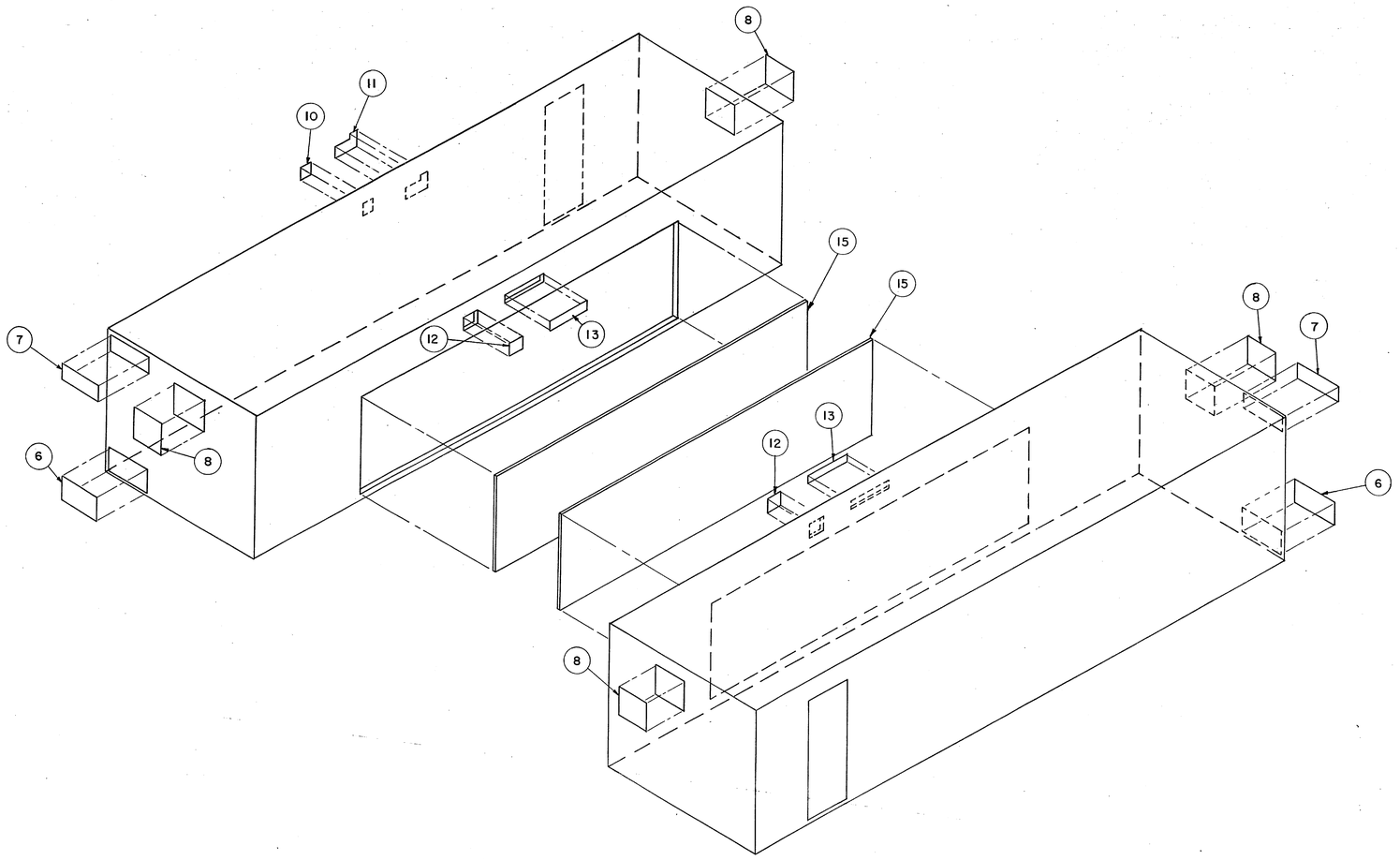

SHIPPING COVERS TO BE REMOVED
(SEE NOTE 4)
NOT TO SCALE

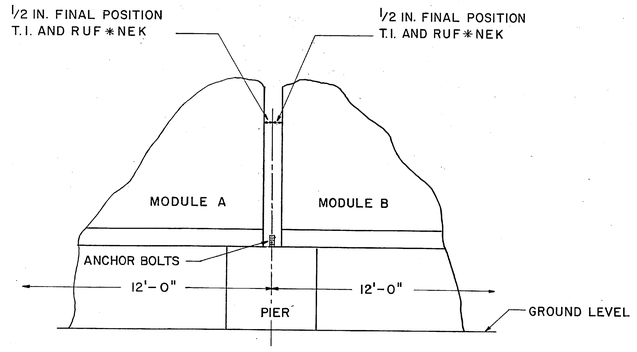

FINAL BUILDING PLACEMENT
FOR RUF*NEK AND T.I. BUILDINGS
NOT TO SCALE
SEE NOTE 7

STANDARD PLAN
ASR-8 RADAR
SHELTER OFFLOADING AND ERECTION PLAN

NAVELEX STANDARD PLAN NO.
0100805A

SIZE	CODE IDENT NO.	NAVELEXSYSCOM DRAWING NO.	REV.
F			
SCALE NONE		SHEET 3 OF 4	

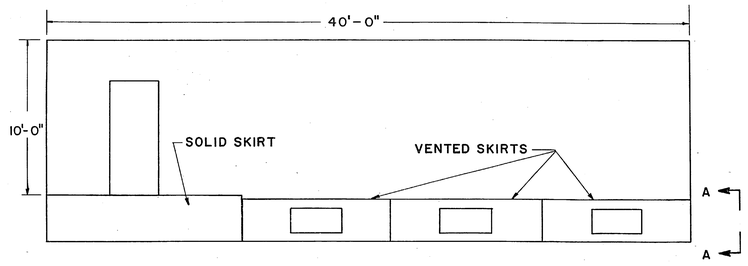

BUILDING "A"
NOT TO SCALE

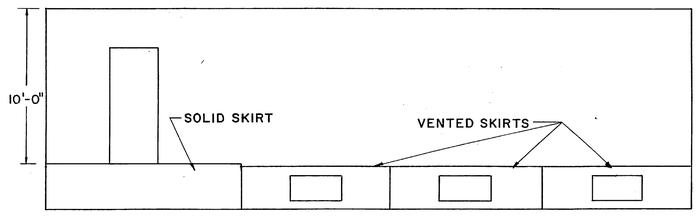

BUILDING "B"
NOT TO SCALE

RUF * NEK SKIRT INSTALLATION

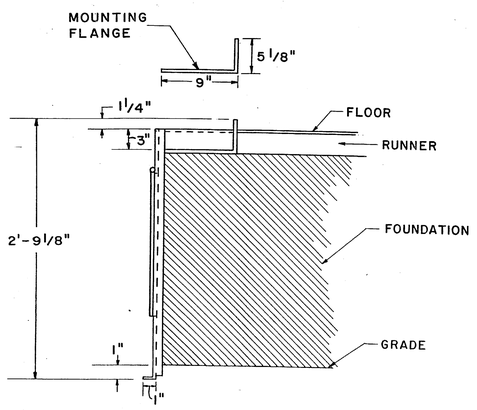

SECTION "A-A"
RUF * NEK SKIRT INSTALLATION DETAIL
NOT TO SCALE

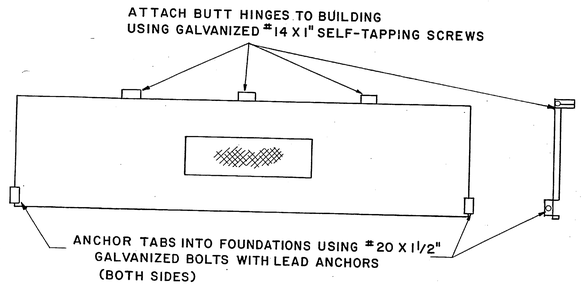

SECTION "B-B"
T.I. SKIRT INSTALLATION DETAIL
NOT TO SCALE

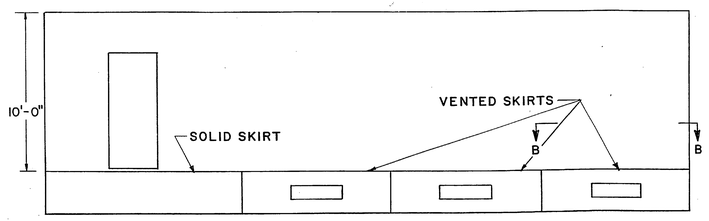

BUILDING "A"
NOT TO SCALE

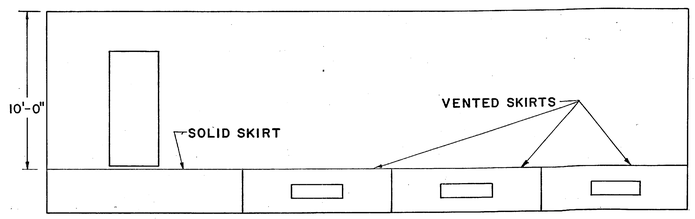

BUILDING "B"

T.I. SKIRT INSTALLATION
NOT TO SCALE

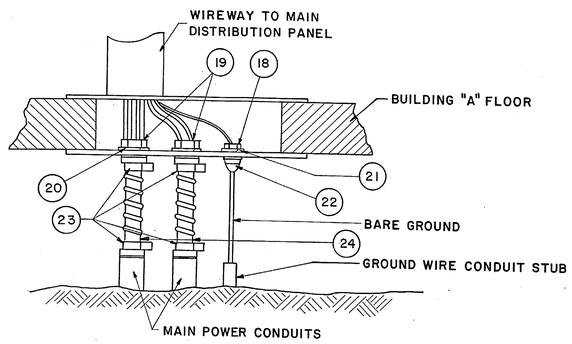

MAIN POWER SERVICE ENTRANCE
(SEE DWG 0100804 SHT.4 FOR PLAN VIEW)
NOT TO SCALE

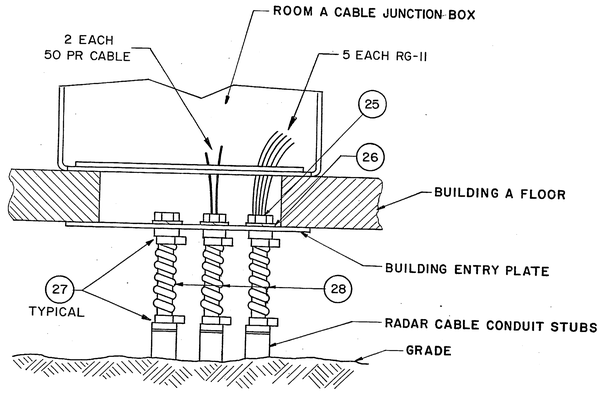

RADAR SYSTEM CABLE ENTRANCE
(SEE DWG 0100804 SHT.4 FOR PLAN VIEW)
NOT TO SCALE

STANDARD PLAN
ASR-8 RADAR
SHELTER OFFLOADING AND ERECTION PLAN

NAVELEX STANDARD PLAN NO.
0100805A

SIZE	CODE IDENT NO.	NAVELEXSYSCOM DRAWING NO.	REV.
F			
SCALE NONE		SHEET 4 OF 4	

LIST OF EQUIPMENT

ITEM NO.	QTY	DESCRIPTION	GOVT OR COML DESIGNATION	REMARKS	FURN BY H.Q.	FURN BY E.V.	FURN BY E.F.A.	FURN BY STA.
1	2	TRANSMITTER				✓		
2	2	RECEIVER				✓		
3	2	PROCESSOR				✓		
4	1	MAINTENANCE PPI (PORTABLE)				✓		
5	1	KLYSTRON CADDY (PORTABLE)				✓		
6	1	RM. A CABLE JUNCTION BOX				✓		
7	1	ANTENNA DISTRIBUTION PANEL				✓		
8	1	ELECTRONIC DISTRIBUTION PANEL RM. A				✓		
9	1	24V PREREGULATOR				✓		
10	1	MAIN DISTRIBUTION PANEL				✓		
11	1	A.C. PROTECT				✓		
12	1	RM. A HOUSE DISTRIBUTION				✓		
13	1	RM. B CABLE JUNCTION BOX				✓		
14	1	BLDG. ALARM / CHANNEL ALARM				✓		
15	1	ELECTRONIC DISTRIBUTION PANEL RM. B				✓		
16	1	24V PREREGULATOR				✓		
17	1	A.C. JUNCTION BOX				✓		
18	1	RM. B HOUSE DISTRIBUTION PANEL				✓		
19	1	WAVEGUIDE PRESSURIZATION SYS. & RESERVOIR				✓		
20	4	CO_2 FIRE EXTINGUISHER				✓		
21	1	WAVEGUIDE SWITCH A				✓		
22	1	WAVEGUIDE SWITCH B				✓		
23	1	MASTER INTERCOM UNIT				✓		
24	2	TRANSMITTER, COOLING UNIT				✓		

REVISIONS

ZONE	SYM	DESCRIPTION	DATE	APPROVAL

NOTES:

1. I.F.F. EQUIPMENT WILL BE H.Q. FURNISHED.

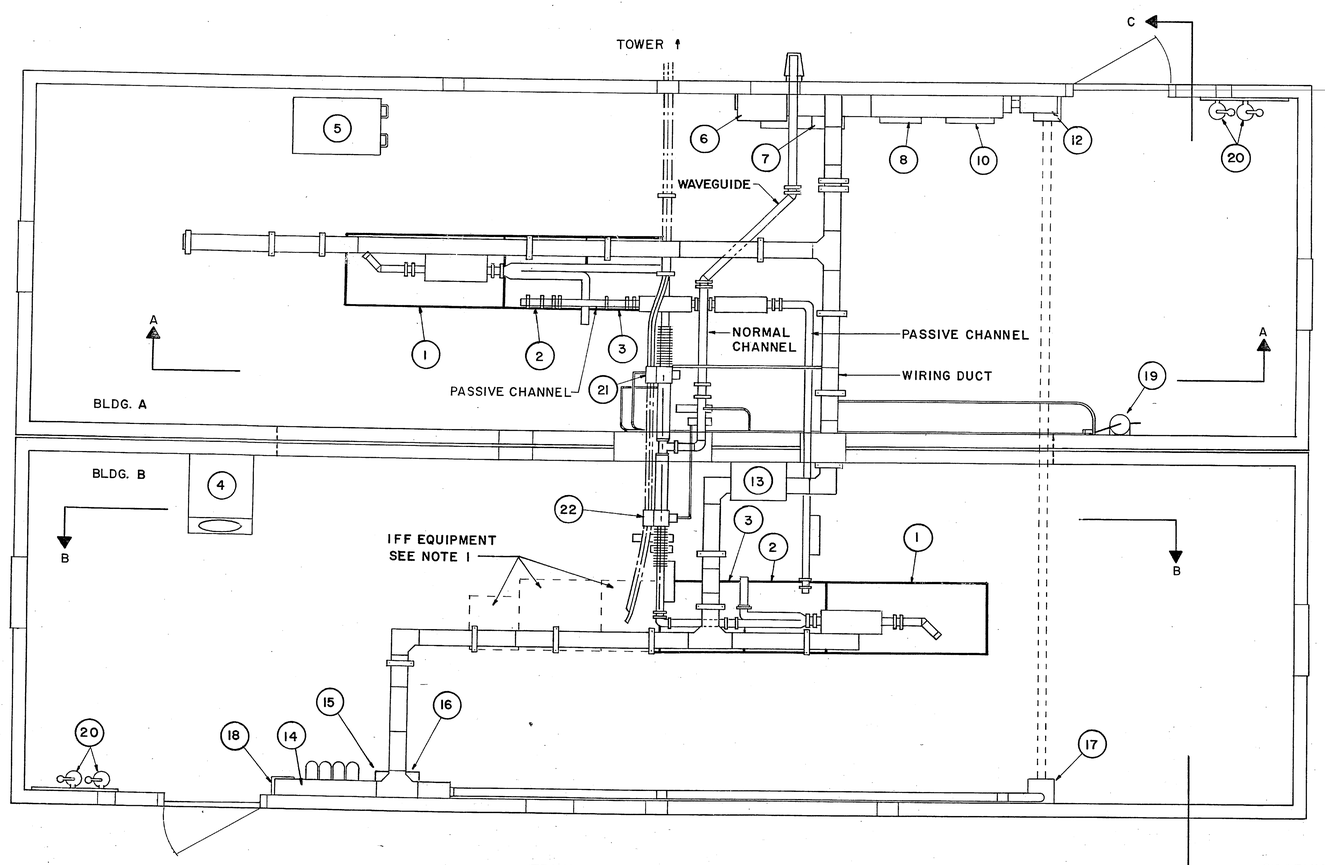

TRANSPORTABLE BUILDINGS
PLAN VIEW
SCALE 1/2" = 1'-0"

GRAPHIC SCALES

1/2" = 1'-0" 1' 6" 0 1' 2' 5'

1" = 1'-0" 1' 6" 0 1' 2' 3'

NO.	REFERENCES	DRAWING NO.
1	PRELIMINARY INSTRUCTION BOOK FOR AIRPORT SURVEILLANCE RADAR MODEL ASR-8, TYPE FA-9335: "SYSTEM"-VOLUME I, "TRANSMITTER"-VOLUME II, "RECIEVER"-VOLUME III, "PROCESSOR"-VOLUME IV, "CONTROL & AUXILIARY EQUIPMENT"-VOLUME V, "MAINTENANCE P.P.I."-VOLUME VII, "TRANSPORTABLE BUILDING"-VOLUME VIII,	TI-6310.13

NAVELEX STANDARD PLAN NO 0100806

NAVAL ELECTRONIC SYSTEMS COMMAND

GENERAL SERVICE — FOR SHORE USE

STANDARD PLAN
ASR-8 RADAR
RADAR SHELTER ARRANGEMENT OF EQUIPMENT

DRAFTSMAN | PROJ ENG
CHECKED | SPONSOR
ACQ ENGR | SECT. HEAD
APPROVED — DATE
APPROVED — DATE
SATISFACTORY TO:
ACTIVITY — DATE

SIZE F | CODE IDENT NO. | NAVELEXSYSCOM DRAWING NO. | REV.

SCALE AS SHOWN | SHEET 1 OF 3

ENCL ( ) TO NAVELEXSYSENGCEN, CHASN LTR SER OF

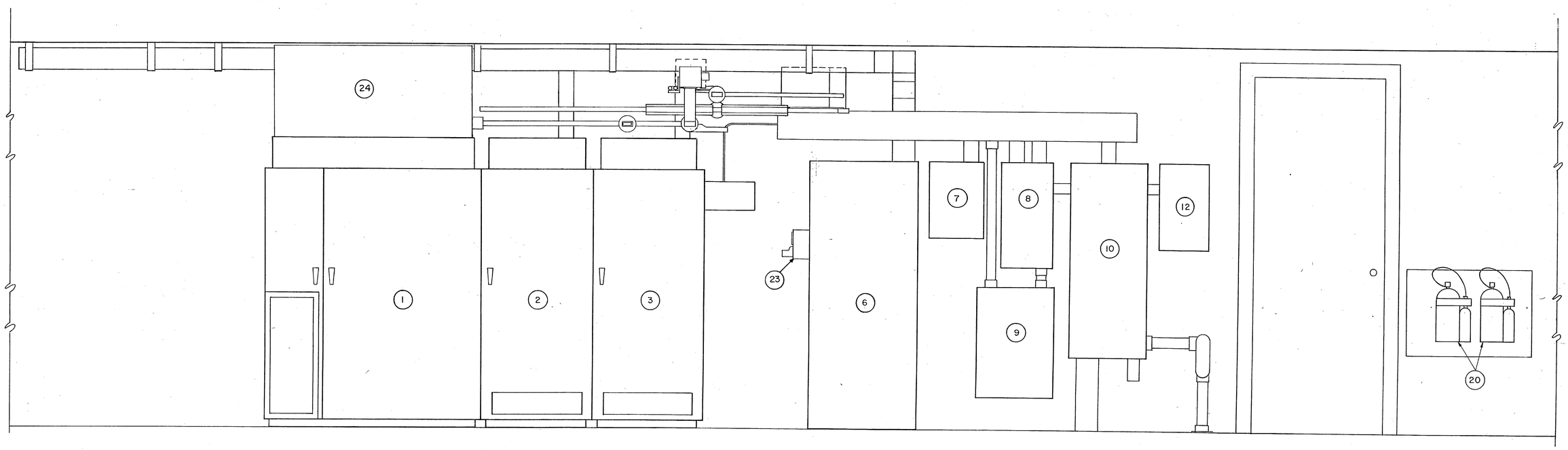

BUILDING "A"

ELEVATION "A-A"

SCALE: 1"=1'-0"

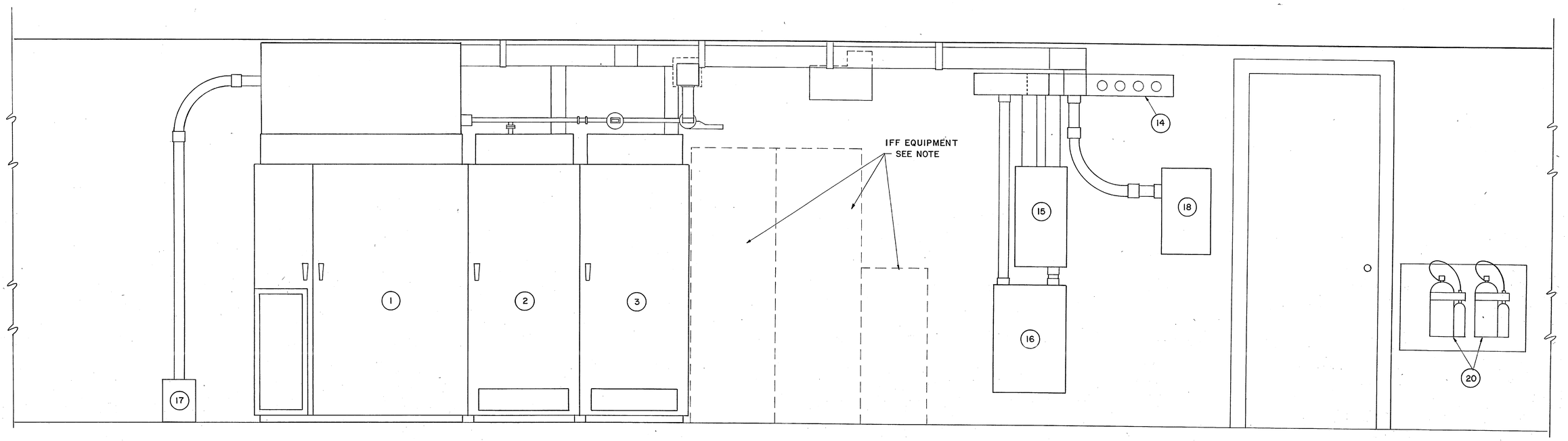

BUILDING "B"

ELEVATION "B-B"

SCALE: 1"=1'-0"

1 10 20 30 40
41 50 80

STANDARD PLAN

ASR-8 RADAR

RADAR SHELTER ARRANGEMENT OF EQUIPMENT

NAVELEX STANDARD PLAN NO.
0100806

SIZE	CODE IDENT NO.	NAVELEXSYSCOM DRAWING NO.	REV.
F			
SCALE AS SHOWN		SHEET 2 OF 3	

K&E 19 1153 5-74 W2848• CAROLINA E&F P-393• GND-NESEC, CHAS-11010-2