JUL 30 1942

REVISION "A"
JUNE 16, 1942

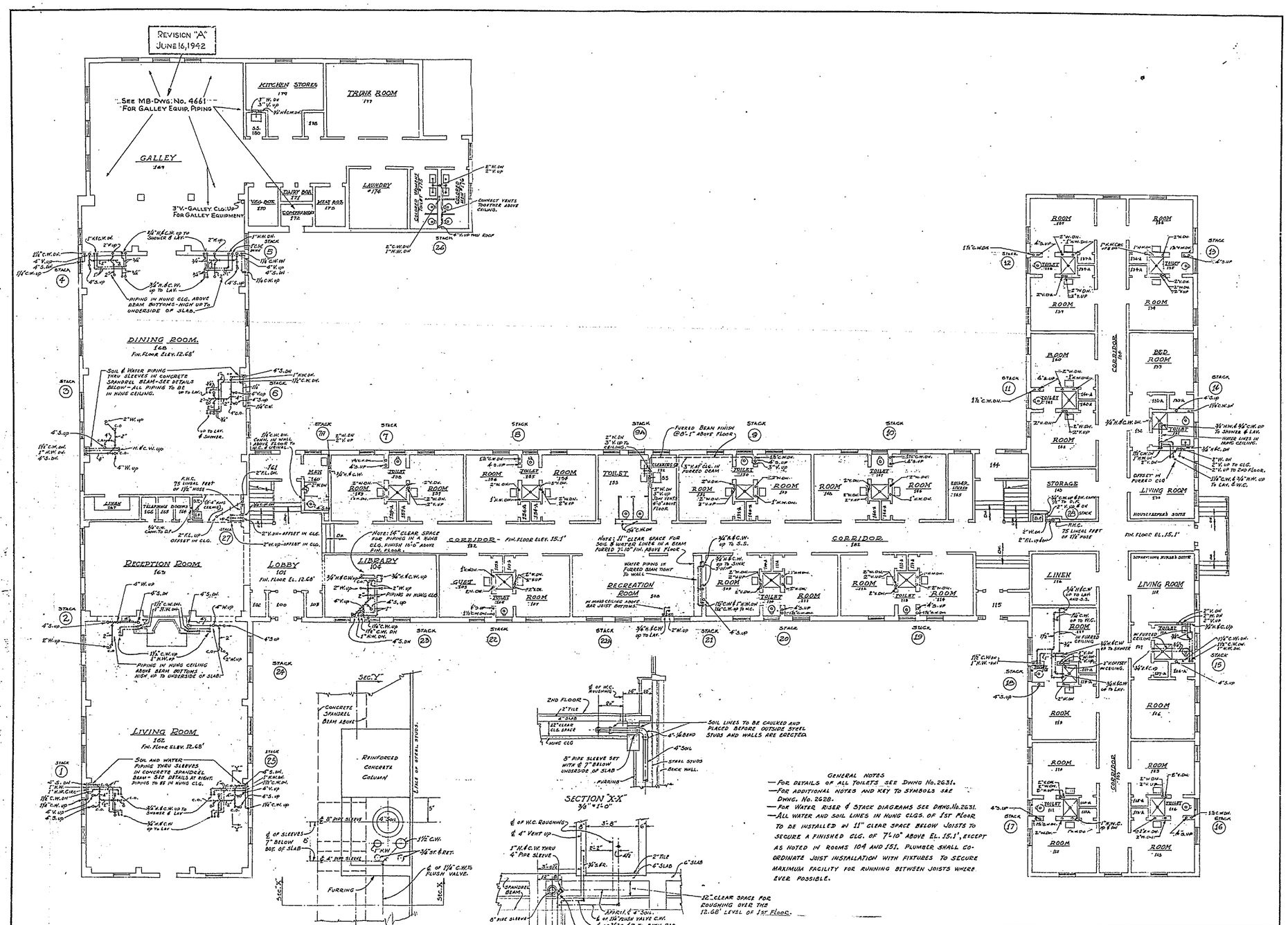

PLAN OF PIPING ARRANGEMENT IN FURRING IN DINING & LIVING ROOMS
SCALE: 1½" = 1'-0"

SECTION "X-X"
3/8" = 1'-0"

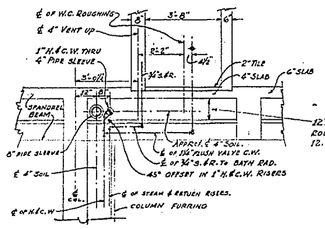

SECTION "Y-Y"
3/8" = 1'-0"

GENERAL NOTES

- FOR DETAILS OF ALL TOILETS SEE DWNG No. 2631.
- FOR ADDITIONAL NOTES AND KEY TO SYMBOLS SEE DWNG. No. 2628.
- FOR WATER RISER & STACK DIAGRAMS SEE DWNG. No. 2631.
- ALL WATER AND SOIL LINES IN HUNG CLGS. OF 1ST FLOOR TO BE INSTALLED IN 11" CLEAR SPACE BELOW JOISTS TO SECURE A FINISHED CLG. OF 7'-10" ABOVE EL. 15.1', EXCEPT AS NOTED IN ROOMS 104 AND 151. PLUMBER SHALL CO-ORDINATE JOIST INSTALLATION WITH FIXTURES TO SECURE MAXIMUM FACILITY FOR RUNNING BETWEEN JOISTS WHERE EVER POSSIBLE.

REVISION	DATE	BRIEF	R.O. IN CHARGE	BY
"A"	6-16-42	ADDED GALLEY NOTES & VENT	K.C.J.	

DRAWN BY R.A.G. & B.D.
TRACED BY C.C.
CHECKED BY
CHIEF DFMN.
IN CHARGE
DATE 3-16-42
SCALE 1/8" - 3/4" - 1½" = 1'-0"
Y. & D. DRAWING NO. 230247
ARCHITECT-ENGINEERS SPECIFICATION NO. 844

CARR & J. E. GREINER CO. — ARCHITECT-ENGINEERS
DURHAM, N. C. BALTIMORE, MD.
MARINE BARRACKS — NEW RIVER, N. C.
BUREAU OF YARDS AND DOCKS — U. S. NAVY

NAVAL HOSPITAL
NURSES' HOME
FIRST FLOOR PLAN AND DETAILS

APPROVED April 17, 1942
BY
RESIDENT OFFICER IN CHARGE

SHEET 2 OF 5
N.B. PROJ. NO. P-100-1-7
N.B. DWG. NO. 2629

PRINTED ON 1/2 TRACING PAPER
ENGINEERS BLUEPRINT CO., INC. CHICAGO-NEW YORK