REVISIONS				
SYM	DESCRIPTION	PREP'D BY	DATE	APPROVED
1	GENERAL REVISION	GHS	2/15/86	OF

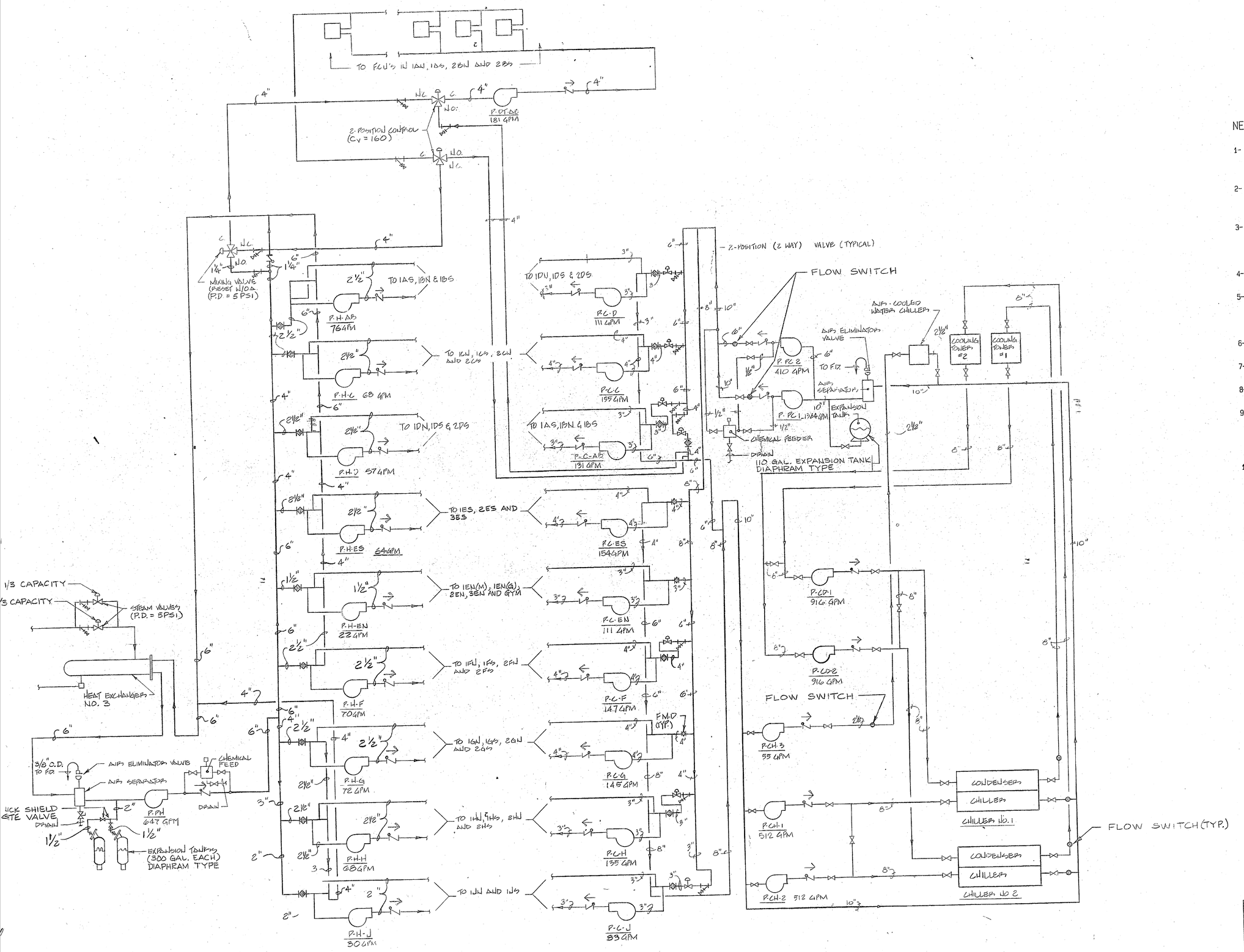

1 M9 M9 PIPING SCHEMATIC
SCALE: NONE

NEW WORK GENERAL NOTES - MECHANICAL

1- RUN DUCT UP TO EXHAUST VENT CAP MOUNTED ON INSULATED SLOPED ROOF CURB WITH WOOD NAILER (5" IN 12" SLOPE). SEE DETAIL C/M-11. SEE EXHAUST VENT SCHEDULE FOR SIZE.

2- PROVIDE AN INSULATED PLENUM UNDER THE EXISTING (24"x48") FRESH AIR ROOF INTAKE WITH A MOTORIZED LOW LEAKAGE DAMPER ABOVE THE NEW TAKEOFFS.

3- ALL MEDIUM PRESSURE DUCTWORK SHALL BE WRAPPED WITH INSULATION AND VAPOR BARRIER. ALL LOW PRESSURE RECTANGULAR SUPPLY DUCTWORK SHALL BE LINED. ROUND OR FLAT OVAL DUCTWORK SHALL BE WRAPPED. SEE SPECIFICATIONS FOR FURTHER DETAILS. SEE DETAIL B/M-43.

4- DUCT SIZES SHOWN ARE ACTUAL SHEET METAL SIZES AND ACCOUNT FOR INTERNAL LINER WHERE CALLED FOR.

5- BEFORE FABRICATING SHEET METAL WORK, COORDINATE LOCATION OF DUCTWORK WITH ELECTRICAL CONDUIT AND PLUMBING PIPING . GRILLE AND DIFFUSER LOCATIONS SHALL BE COORDINATED WITH THE ARCH. REFLECTED CEILING PLAN.

6- PAINT FLAT BLACK OR USE DARK INSULATION BEHIND CEILING EXHAUST AND RETURN GRILLES TO PREVENT THE VISIBILITY OF SHINY SURFACES.

7- SEAL ALL OPENINGS THRU ROOF, FLOORS AND WALLS AS DETAILED ON SHT. A-16.

8- MOUNT THERMOSTATS 48" ABOVE THE FLOOR AND PROVIDE A PROTECTIVE COVER (LOCKING TYPE).

9- ALL SUPPLY OUTLETS SHALL BE PROVIDED WITH A DAMPERING DEVICE. IF THE DAMPER IS NOT CALLED OUT IN THE AIR DISTRIBUTION SCHEDULE, IT SHALL BE PROVIDED IN THE DUCTWORK WHETHER SHOWN OR NOT. WHEN POSSIBLE, LOCATE DAMPERS AT LEAST 48" FROM FROM OUTLET. DAMPERS SHALL BE LOCKING TYPE FROM OUTSIDE OF DUCTWORK.

10- THE DAMPERS IN THE DUCTS SHALL BE AS FOLLOWS:
- A. IF CLOSER THAN 4'-0" TO THE OUTLET, THEY SHALL BE PARALLEL BLADE TYPE.
- B. IF IN THE NECK OF THE DIFFUSER, THEY SHALL BE OPPOSED BLADE TYPE.
- C. IF OTHERWISE, THEY SHALL BE SINGLE BLADE TYPE WITH OPERATOR IN THE MIDDLE OF THE DAMPER.

11- ALL DIMENSIONS SHOWN ARE IN INCHES, UNLESS OTHERWISE NOTED.

12- PROVIDE ECCENTRIC REDUCERS WHERE HORIZONTAL PIPING CHANGES SIZE.

13- PROVIDE AN EXTRA SET OF FILTERS FOR ALL AIR CONDITIONING SYSTEMS TO BE INSTALLED JUST PRIOR TO OCCUPANCY AT DIRECTION OF CONTRACTING OFFICER.

14- SEE M-40 FOR KEY TO PUMP TAG NUMBERS.

15- SEE ARCHITECTURAL DRAWINGS FOR SIZES & DETAILS OF ALL LOUVERS.

16- PROVIDE PLUGGED TEES WHERE CONDENSATE DRAIN LINES FROM COOLING COILS CHANGE DIRECTION. INSULATE LINES WITH 3/8" THICK CLOSED-CELL TYPE PER ASTM C 534-82 IN ALL AREAS EXCEPT AIR PLENUMS WHICH SHALL BE 1/2" FIBERGLASS WITH VAPOR BARRIER (FOIL TYPE). SEAL ALL JOINTS AS RECOMMENDED BY THE MANUFACTURER.

17. MECHANICAL ROOMS: CONTRACTOR SHALL COORDINATE ROUTING OF ALL PIPING TO PREVENT INTERFERENCE WITH EQUIPMENT SERVICE SPACE. ALL PIPING SHALL BE SUPPORTED ADEQUATELY TO PREVENT LATERAL MOVEMENT. DRAIN PIPING RUN ALONG THE FLOOR SHALL BE BRACKETED THERETO.

18. PROVIDE A WALL MOUNTED THERMOSTAT IN EACH MECHANICAL ROOM TO ENERGIZE THE RESPECTIVE MECHANICAL ROOM EXHAUST FAN WHEN THE SPACE TEMPERATURE RISES ABOVE THE SETPOINT OF 90 DEGREES F. MOUNT THE THERMOSTAT ON AN INTERIOR WALL. THE EXHAUST FAN SHALL BE INTERLOCKED WITH A NORMALLY CLOSED DISCHARGE AND OUTSIDE AIR DAMPER. SEE TYPICAL DETAILS A/M-11 AND B/M-11.

19. PROVIDE A STRAINER W/BLOWDOWN VALVE ON THE INLET SIDE OF EACH FLOW CONTROL VALVE.

20. ALL FLOW CONTROL VALVES SHALL BE LINE SIZE.

M-9

FEREBEE, WALTERS & ASSOCIATES
ARCHITECTURE PLANNING LANDSCAPE DESIGN INTERIOR DESIGN
CHARLOTTE, NORTH CAROLINA

DEPARTMENT OF THE NAVY — NAVAL FACILITIES ENGINEERING COMMAND
ATLANTIC DIVISION — NORFOLK, VIRGINIA
NAVAL STATION

DES. GHS | DR. GHS | CHK. [illegible]
PROJ. MGR. CCD | CH. ENGR. [illegible]
SUBMITTED BY: Charles C. Dixon, Jr. DATE: 6/10/85 PRINCIPAL
FIRM MEMBER
EFD&FP [illegible] ROV
HD DR
APPROVED [illegible] DATE 6/17/85 OFFICER IN CHARGE
APPROVED [illegible] DATE 17 July 85 FOR EFD FOR COMMANDER, NAVFAC

MARINE CORPS BASE, CAMP LEJEUNE, NORTH CAROLINA
CONVERT HOSPITAL TO DIVISION HEADQUARTERS
MECHANICAL - PIPING SCHEMATIC & GENERAL NOTES

SIZE	CODE IDENT. NO.	NAVFAC DRAWING NO.
F	80091	4124277
		CONSTR. CONTR. NO. N62470-82-B-2243
SCALE AS NOTED	SPEC. 05-82-2243 (REV.)	SHEET 122 of 243

EFD DWG. NO. 224277

NORTH CAROLINA PROFESSIONAL SEAL ENGINEER GLENN H. SNYDER