REVISIONS			
SYM	DESCRIPTION	DATE	APPROVED

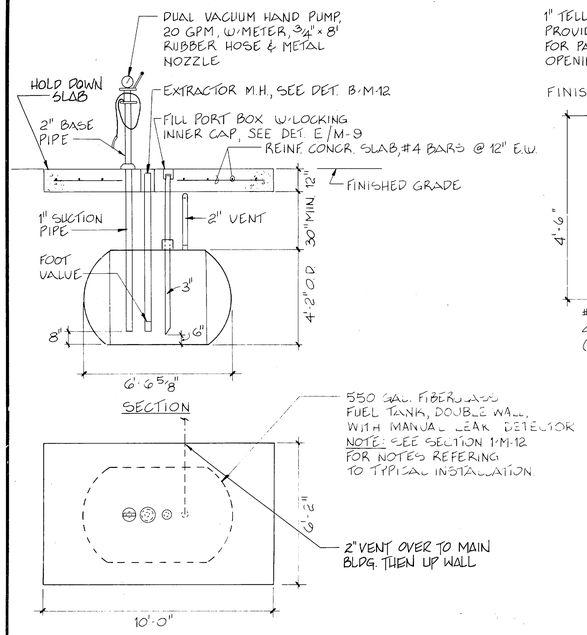

A C-2 M-9 U.G. FUEL TANK FOR DYNO TEST AREA
3/8" = 1'-0"

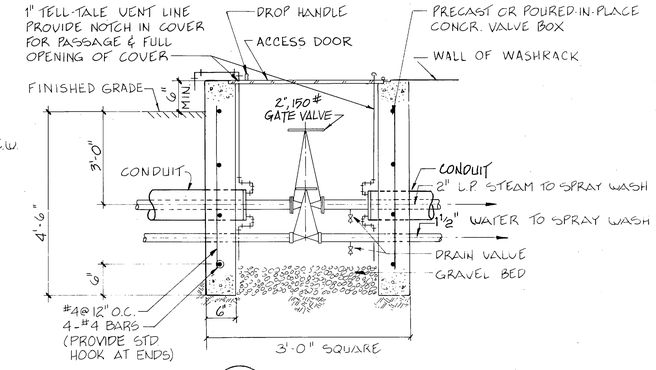

B M-9 M-9 VALVE BOX
NTS

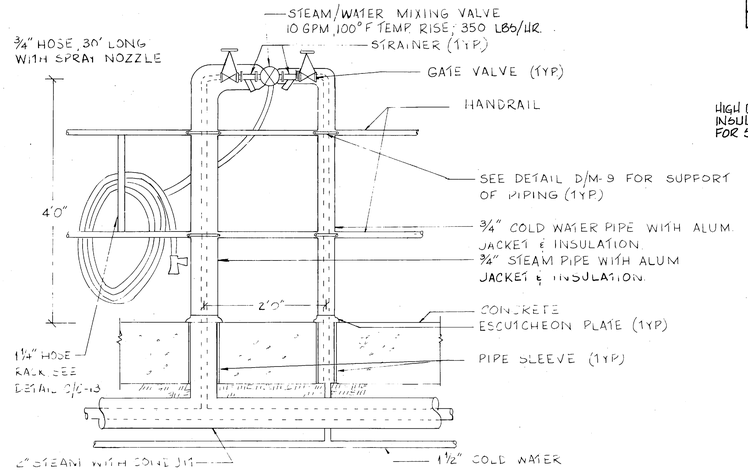

M-9 M-9 SPRAY WASH STATION
1" = 1'-0"

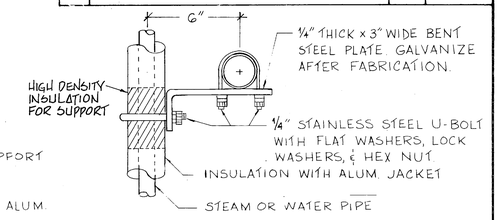

D M-9 M-9 PIPE SUPPORT
NOT TO SCALE

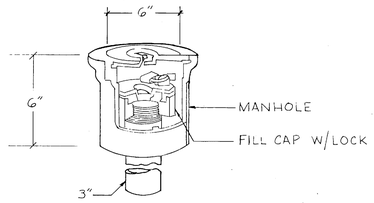

E M-9 M-9 FILL CAP / MANHOLE ASSEMBLY
NOT TO SCALE

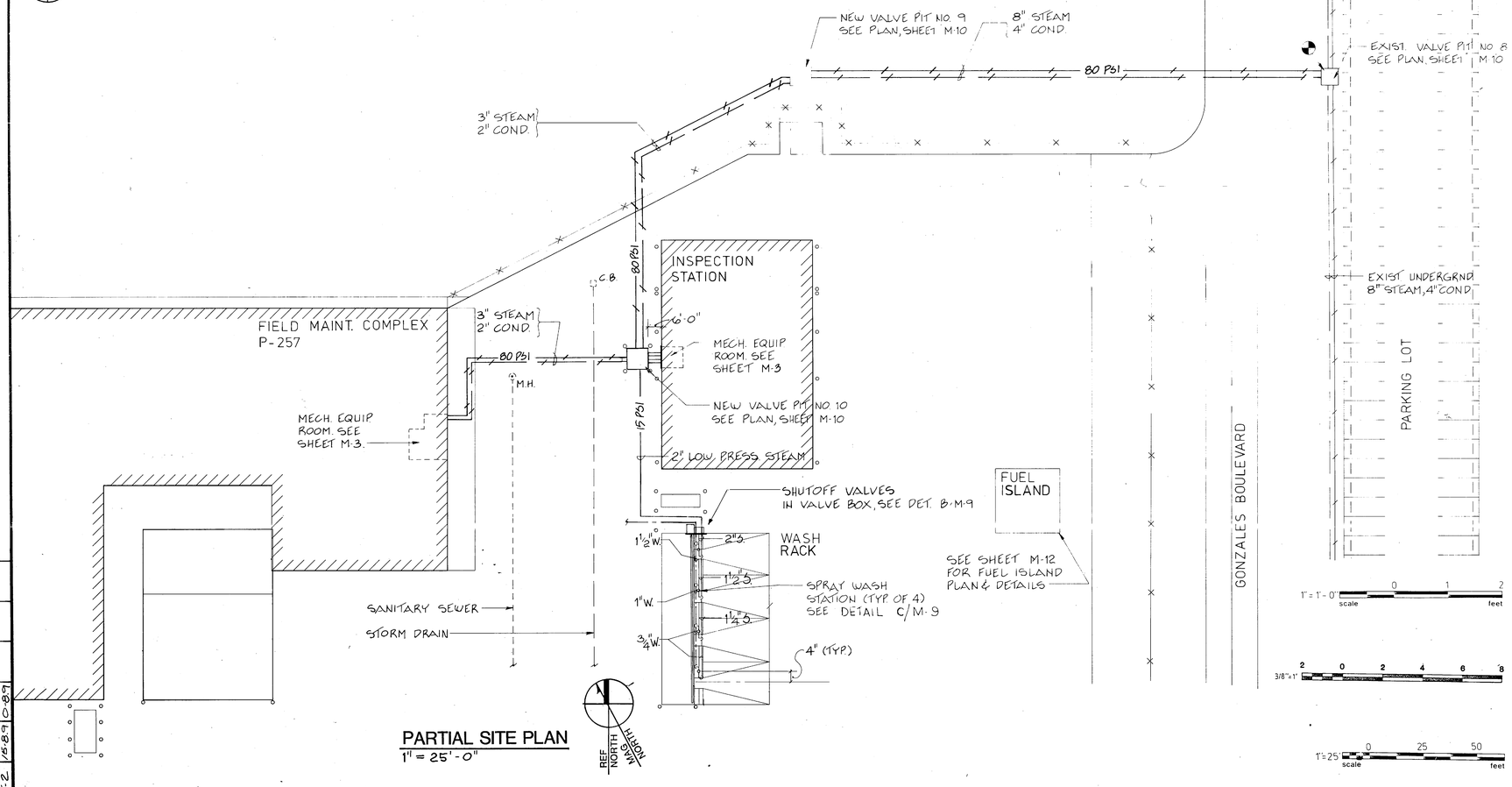

PARTIAL SITE PLAN
1" = 25'-0"

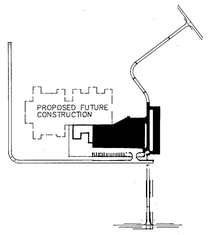

KEYPLAN

1" = 1'-0" scale 0 1 2 feet

3/8" = 1' 2 0 2 4 6 8

1" = 25' scale 0 25 50 feet

T-1	15-89	10-89	0
	0	0	0
T-2	15-89	10-89	0

FC-280

RECORD DRAWING LETTER DATED

M-9

OLSEN ASSOCIATES
RALEIGH, N. CAROLINA
ENGINEERS & ARCHITECTS

DEPARTMENT OF THE NAVY — NAVAL FACILITIES ENGINEERING COMMAND
ATLANTIC DIVISION
NAVAL STATION — NORFOLK, VIRGINIA

DES. TBD DR. RLP CHK. TBD
PROJ. MGR. DNL CH. ENGR.
SUBMITTED BY: DATE 3-6-87
FIRM MEMBER PRINCIPAL
EFD JOR RVD JTT
HD RCB DIR KD
APPROVED DATE
OFFICER IN CHARGE
APPROVED DATE 5/14/87
FOR EFD FOR COMMANDER NAVFAC

MARINE CORPS BASE, CAMP LEJEUNE, N.C.
FIELD MAINTENANCE COMPLEX

PARTIAL SITE PLAN, STEAM LINES
SPRAY WASH STATION

SIZE F | CODE IDENT. NO. | NAVFAC DRAWING NO. 4155687
CONSTR. CONTR. NO. N62470-85-B-5149
SCALE AS NOTED | SPEC. 05-85-5149 | SHEET 70 OF 93

EFD DWG. NO. 255687

REVISIONS			
SYM	DESCRIPTION	DATE	APPROVED
1	REVISED AS-BUILT	1/7/91	

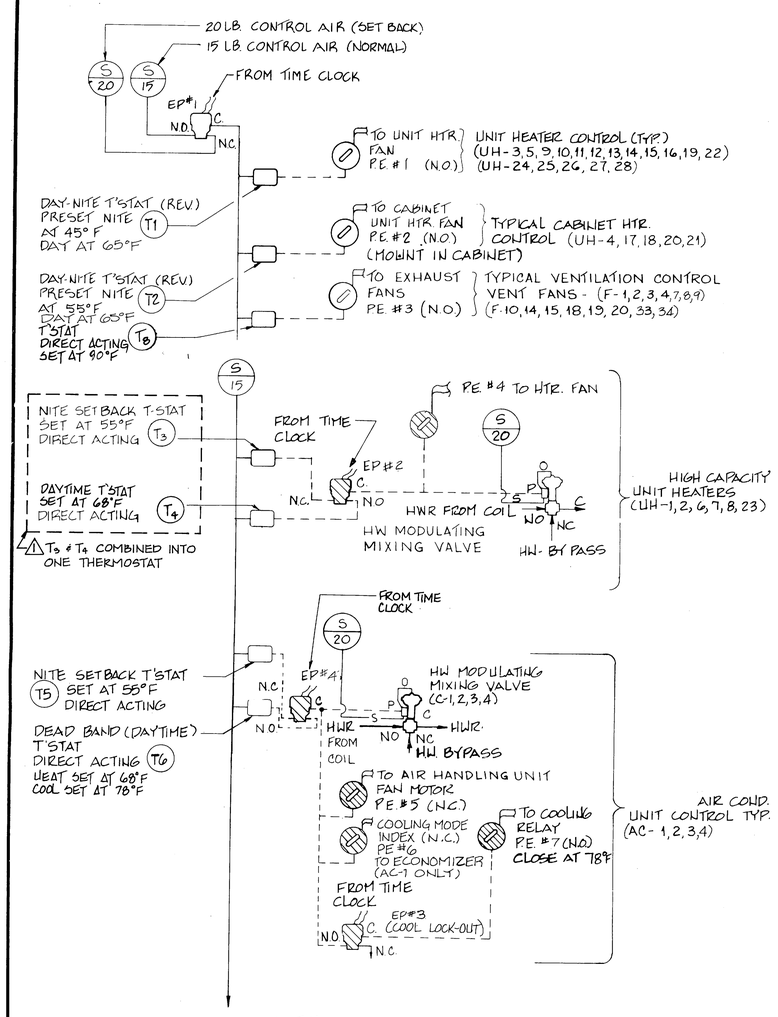

HEATING & AIR CONDITIONING PNEUMATIC CONTROL DIAGRAM

CONTROL LEGEND			
	ELECTRIC/PNEUMATIC SWITCH (E.P.)	⊗	RESTRICTOR
	PNEUMATIC/ELECTRIC SWITCH (P.E.)	CR	CONTROL RELAY
M	MOTOR	NO	NORMALLY OPEN
	MODULATING VALVE	NC	NORMALLY CLOSED
T_1	THERMOSTAT	C	COMMON
$T\ T_1$	TEMPERATURE TRANSMITTER	P	PILOT
OR	MANUAL OVERRIDE	S	SUPPLY
IFR	INDOOR FAN RELAY	MVD	MANUAL VOLUMN DAMPER
OFR	CONDENSOR FAN RELAY	O.A.	OUTSIDE AIR
C	COMPRESSOR	OL	OVERLOAD RELAY
MA	MIXED AIR	O	OUTPUT

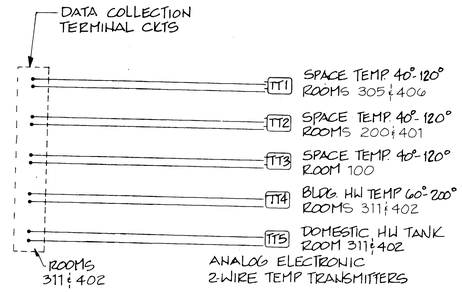

BUILDING TEMPERATURE MONITORING

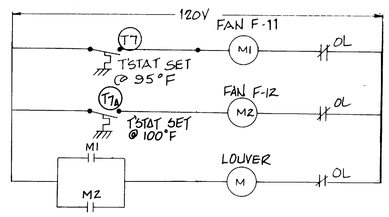

RM. 223 VENT ELEC. CONTROL DIAG.

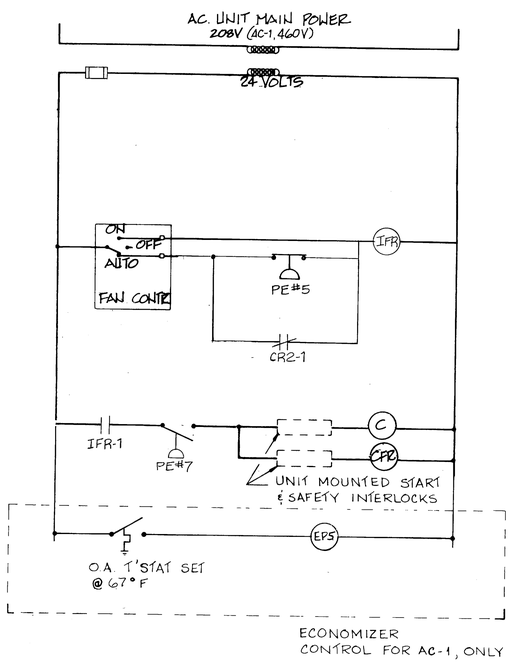

TYPICAL A/C UNIT CONTROL WIRING

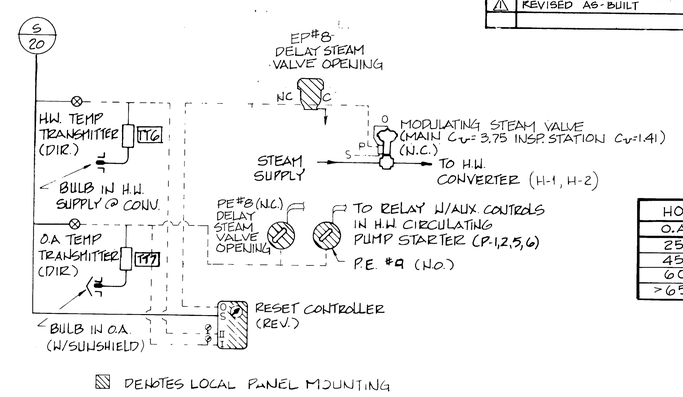

HOT WATER RESET	
O.A.	LVG. WATER
25°F	180°F
45°F	140°F
60°F	80°F
>65°F	PUMP OFF

HOT WATER CONVERTER CONTROL

NO SCALE

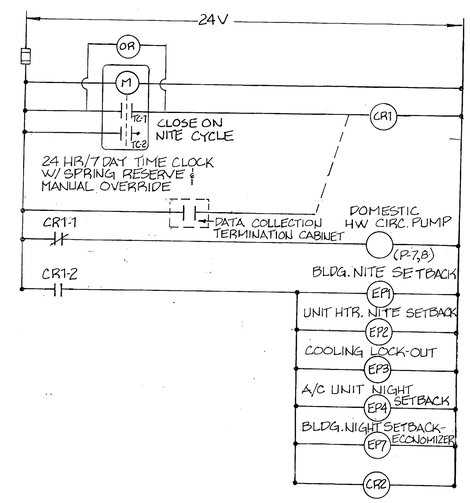

BUILDING MASTER CONTROL

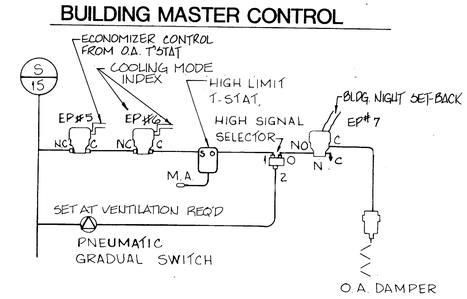

ECONOMIZER AIR CONTROL AC-1

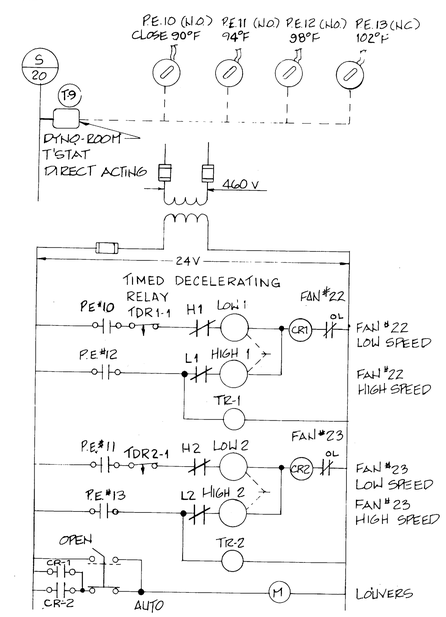

DYNO-ROOM FANS

NOTE: TYPICAL FOR FANS F-22/F-23 AND F-24/F-25 AND F-26/F-27 AND F-28/F-29

FC 280

RECORD DRAWING LETTER DATED 1/1/91

M-8

OLSEN ASSOCIATES RALEIGH, N. CAROLINA ENGINEERS & ARCHITECTS

DEPARTMENT OF THE NAVY NAVAL FACILITIES ENGINEERING COMMAND ATLANTIC DIVISION NAVAL STATION NORFOLK, VIRGINIA

MARINE CORPS BASE, CAMP LEJEUNE, N.C.
FIELD MAINTENANCE COMPLEX

CONTROL DETAILS

DES EDB DR KC CHK TBD
PROJ. MGR DNL CH. ENGR
SUPERVISOR DATE
FIELD ENGINEER 3-6-87 PRINCIPAL
EFD JOR BVD JT
NO RGS DIR KC
APPROVED DATE
OFFICER IN CHARGE
APPROVED DATE 3/14/87
FOR EFD FOR COMMANDER NAVFAC

SIZE F | CODE IDENT NO. | NAVFAC DRAWING NO. 4155686
CONSTR. CONTR. NO. N62470-85-B-5149
SCALE NONE | SPEC. 05-85-5149 | SHEET 69 OF 93

EFD DWG. NO. 255686

REVISIONS			
SYM	DESCRIPTION	DATE	APPROVED

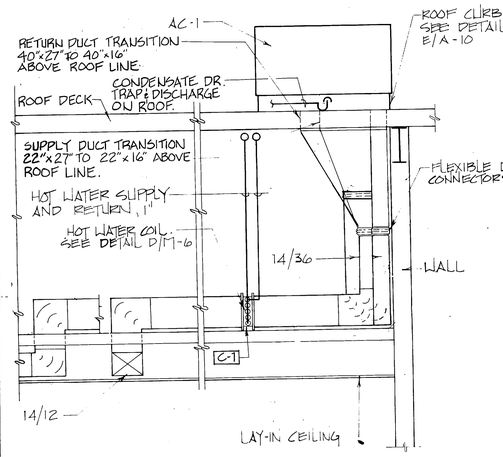

1 M-1 M-7 SECTION AC-1
3/8" = 1'-0"

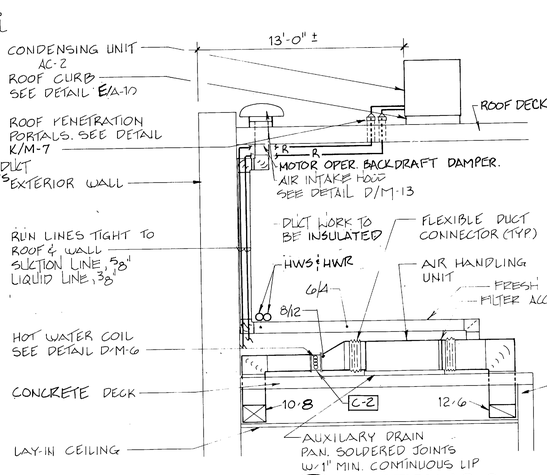

2 M-2 M-7 SECTION AC-2
3/8" = 1'-0"

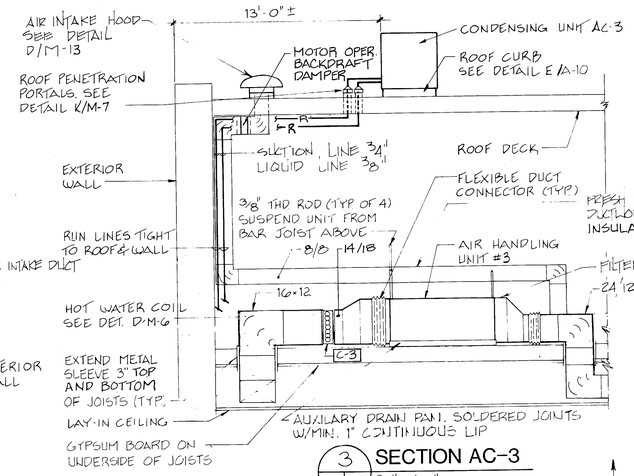

3 M-3 M-7 SECTION AC-3
3/8" = 1'-0"

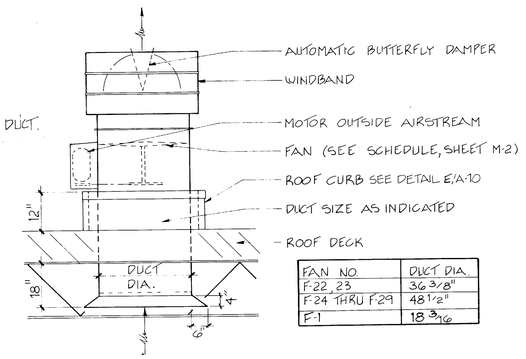

FAN NO	DUCT DIA
F-22, 23	36 3/8"
F-24 THRU F-29	48 1/2"
F-1	18 3/16

A M-1 M-7 DYNO ROOM FAN
1/2" = 1'-0"

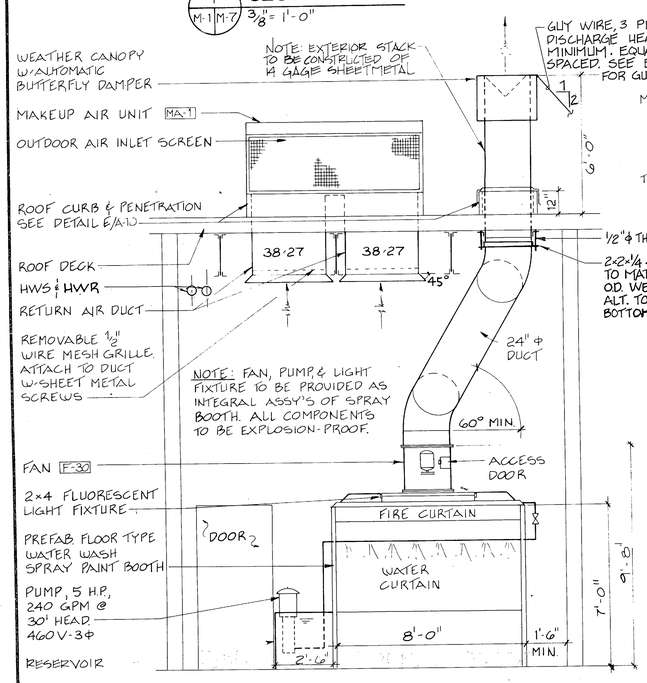

4 M-2 M-7 SECTION PAINT ROOM
3/8" = 1'-0"

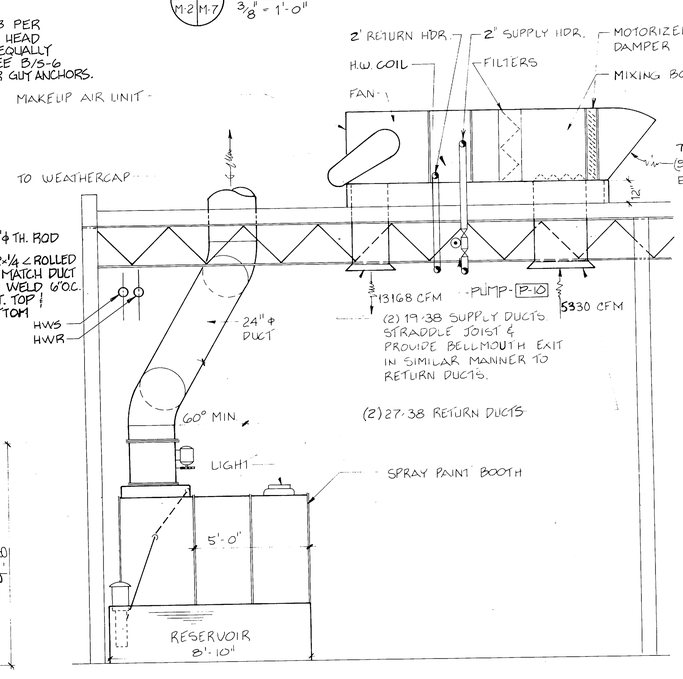

5 M-2 M-7 SECTION PAINT ROOM
3/8" = 1'-0"

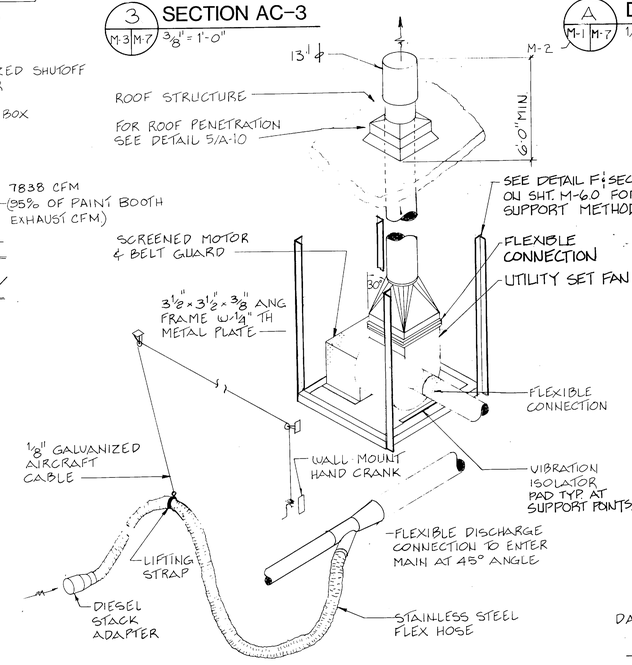

B M-4 M-7 VEHICLE EXHAUST SYSTEM
NTS

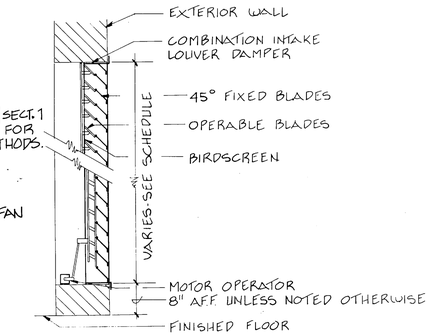

C M-1 M-7 INTAKE LOUVER
3/4" = 1'-0"

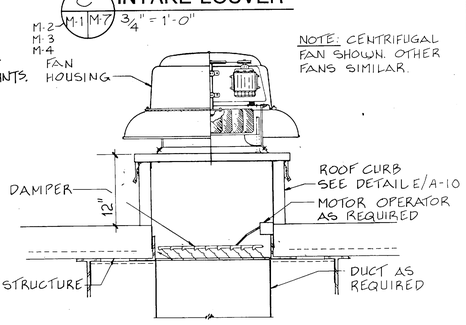

D M-1 M-7 ROOFTOP FAN
NTS
M-2
M-3
M-4

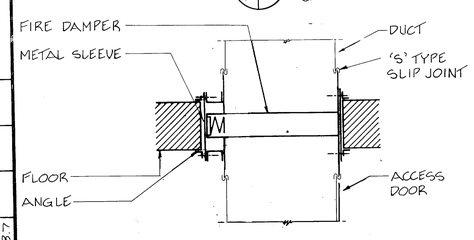

E M-1 M-7 HORIZ. FIRE DAMPER
NTS
M-2
M-4
M-7

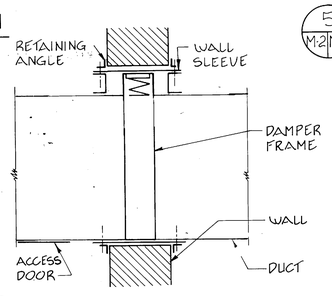

F M-3 M-7 VERTICAL FIRE DAMPER
NTS

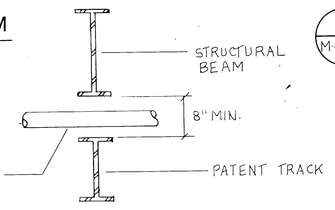

G M-1 M-7 PIPE THRU HOIST
NOT TO SCALE
M-2

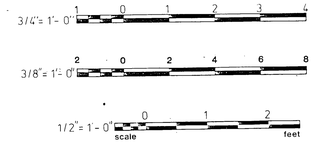

T-1	15-8.7	0-8.7	0
T-2	15-8.7	0-8.7	0

FC 280

RECORD DRAWING LETTER DATED

M-7

OLSEN ASSOCIATES
RALEIGH, N. CAROLINA
ENGINEERS & ARCHITECTS

DEPARTMENT OF THE NAVY
NAVAL FACILITIES ENGINEERING COMMAND
ATLANTIC DIVISION
NAVAL STATION NORFOLK, VIRGINA

MARINE CORPS BASE, CAMP LEJEUNE, N.C.
FIELD MAINTENANCE COMPLEX

AIR CONDITIONING & VENTILATION DETAILS

DES EDB DR RLP CHK TBD
PROJ. MGR DNL CH. ENGR.
SUBMITTED BY 3-C-87
FIRM MEMBER PRINCIPAL
EFD JDR RVD JTJ
HD RCB DIR KD
APPROVED DATE
OFFICER IN CHARGE
APPROVED 5 14 87
FOR EFD FOR COMMANDER NAVFAC

SIZE F | CODE IDENT. NO. | NAVFAC DRAWING NO. 4155685
CONSTR. CONTR. NO. N62470-85-B-5149
SCALE AS NOTED | SPEC. 05-85-5149 | SHEET 68 OF 93

EFD DWG. NO. 255685

REVISIONS			
SYM	DESCRIPTION	DATE	APPROVED

NOTE: DETAIL SHOWN IS FOR SINGLE-PASS CONVECTOR. MULTI-PASS CONVECTORS SIMILAR. SEE SCHEDULE FOR TYPE UNIT REQ'D.

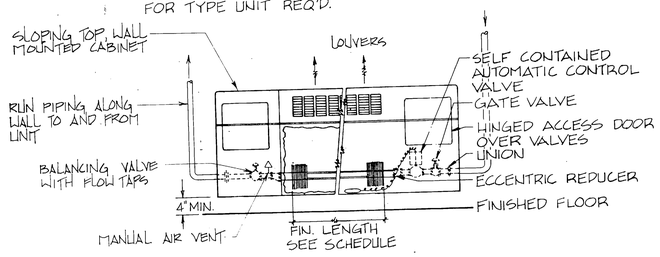

A — HOT WATER CONVECTOR

M-2 | M-6 — M-3, M-4 — N.T.S.

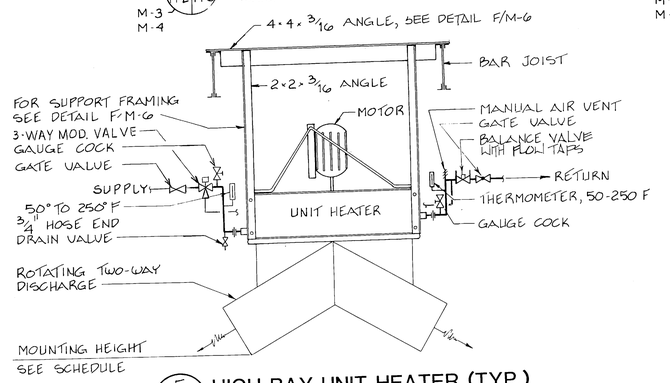

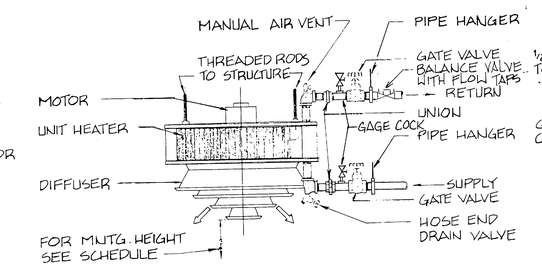

B — VERTICAL UNIT HEATER

M-1 | M-6 — M-2, M-4 — N.T.S.

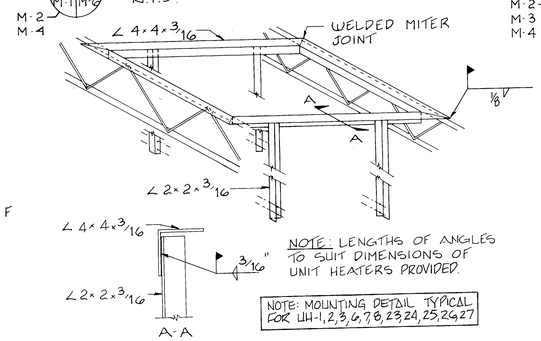

NOTE: LENGTHS OF ANGLES TO SUIT DIMENSIONS OF UNIT HEATERS PROVIDED.

NOTE: MOUNTING DETAIL TYPICAL FOR UH-1,2,3,6,7,8,23,24,25,26&27

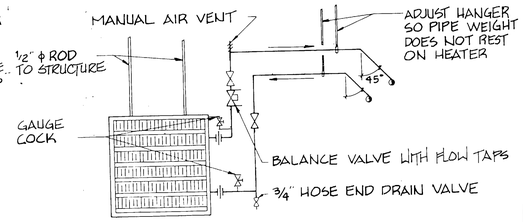

C — HORIZONTAL UNIT HEATER

M-1 | M-6 — M-2, M-3, M-4 — N.T.S.

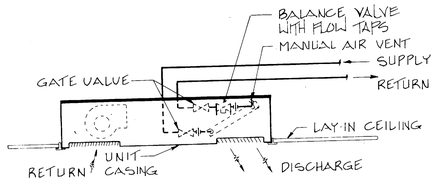

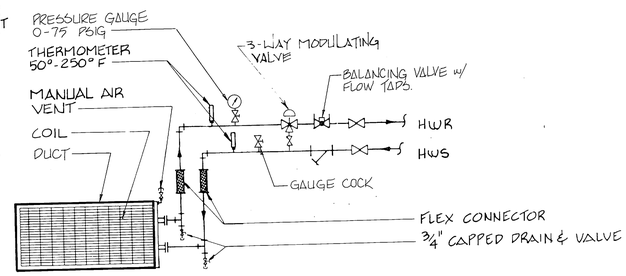

D — HOT WATER COIL

M-1 | M-6 — M-2, M-3, M-7 — N.T.S.

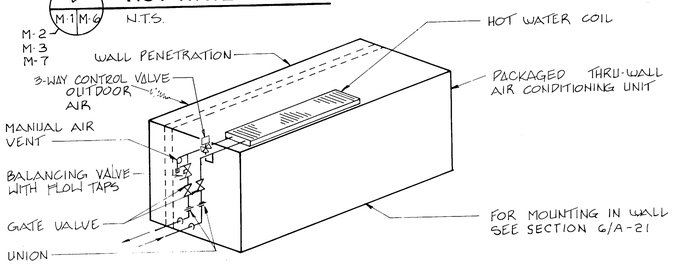

E — HIGH BAY UNIT HEATER (TYP.)

M-1 | M-6 — M-2, M-3 — NOT TO SCALE

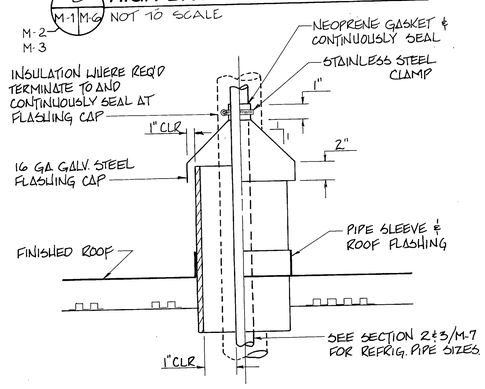

K — REFRIGERANT PIPE PENETRATION DETAIL

M-7 | M-6 — N.T.S.

F — UNIT HEATER SUPPORT DET.

M-1 | M-6 — M-2, M-3, M-6, M-7 — NO SCALE

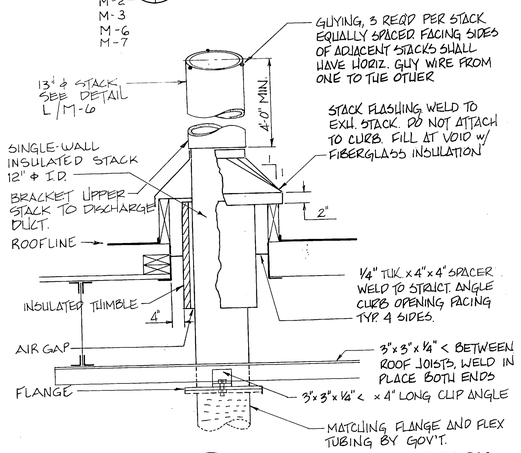

J — DIESEL EXHAUST STACK

M-2 | M-6 — NOT TO SCALE

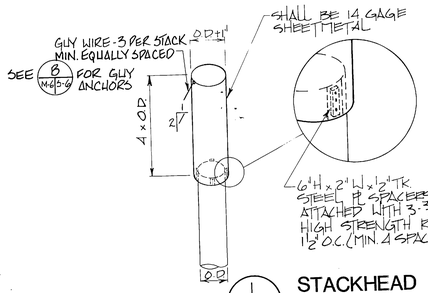

L — STACKHEAD

M-6 | M-6 — N.T.S.

G — CABINET UNIT HEATER

M-1 | M-6 — M-2 — NOT TO SCALE

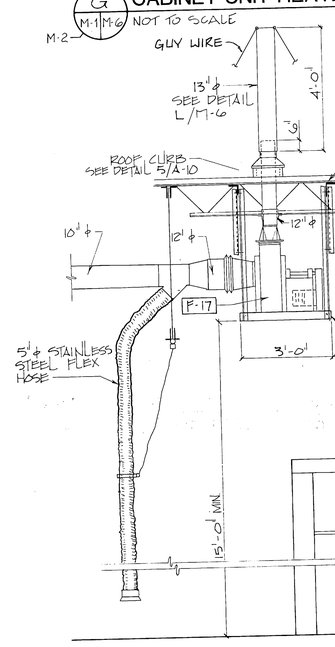

NOTE: ALL DIMENSIONS ARE TYPICAL FOR F-6, -31, -32. SEE DETAIL B/M-7 FOR FURTHER VEHICLE EXHAUST DETAIL

1 — VEHICLE EXHAUST FAN SECTION

M-4 | M-6 — 1/2" = 1'-0"

H — AC-4 H.W. PIPING

M-4 | M-6 — N.T.S.

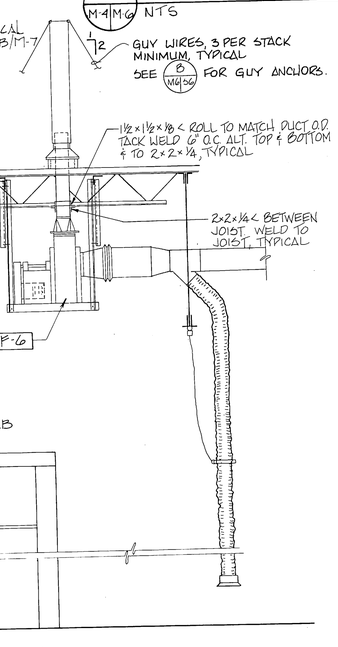

1/2" = 1'-0" SCALE FEET

3" = 1'-0" SCALE FEET

FC 280

RECORD DRAWING LETTER DATED	M-6

OLSEN ASSOCIATES
RALEIGH, N. CAROLINA
ENGINEERS & ARCHITECTS

DEPARTMENT OF THE NAVY — NAVAL FACILITIES ENGINEERING COMMAND
ATLANTIC DIVISION
NAVAL STATION — NORFOLK, VIRGINIA

MARINE CORPS BASE, CAMP LEJEUNE, N.C.
FIELD MAINTENANCE COMPLEX

HEATING & VENTILATION DETAILS

DES. EDB DR. RLP CHK. TBD
PROJ. MGR. DNL CH. ENGR.
SUBMITTED BY: FIELD WEATHER — DATE 2-6-87 — PRINCIPAL
EFD JOR. RVD. JTH
HD RCB DIR. KO
APPROVED — DATE
OFFICER IN CHARGE
APPROVED — DATE 5 JUL 87
FOR EFD FOR COMMANDER NAVFAC

NORTH CAROLINA PROFESSIONAL SEAL 11501 ENGINEER DONALD BARKER DANIELS

SIZE	CODE IDENT. NO.	NAVFAC DRAWING NO.
F		4155684
		CONSTR. CONTR. NO. N62470-85-B-5149
SCALE AS NOTED	SPEC. 05-85-5149	SHEET 67 OF 93

EFD DWG. NO. 255684

T-1	0	15-86	0-86	0	0
T-2	0	15-86	0-86	0	0

REVISIONS			
SYM	DESCRIPTION	DATE	APPROVED

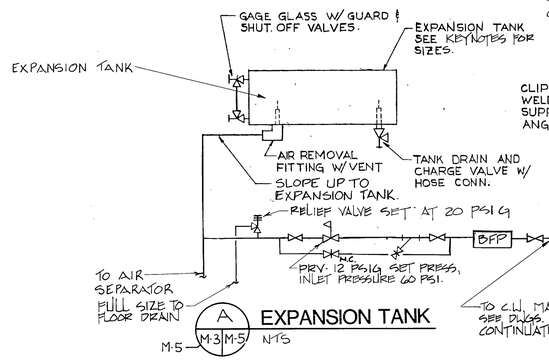

A M-3 M-5 — EXPANSION TANK
M-5 NTS

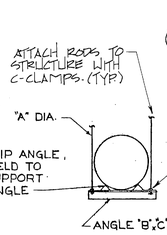

GAL.	"A"	"B"	"C"	"D"
0-50	½"	2"	2"	¼"
50-100	⅝"	3"	3"	¼"

SUPPORT

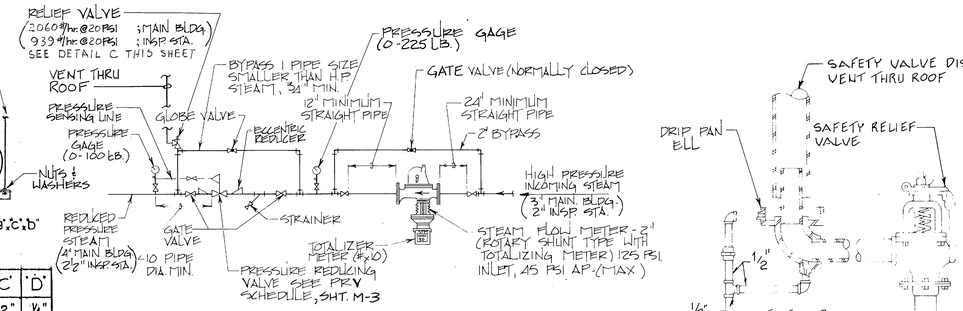

B M-3 M-5 — PRESSURE REDUCING STATION
M-5 N.T.S.

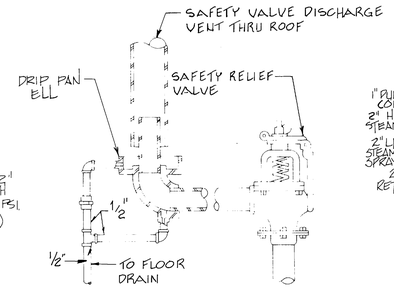

C M-3 M-5 — DRIP ELBOW DETAIL
M-5 NO SCALE

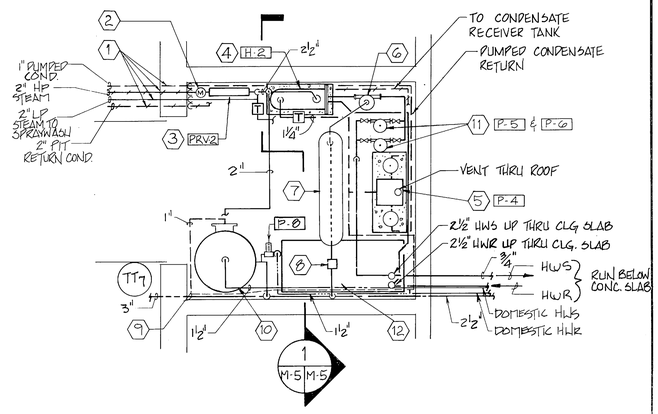

1 M-5 M-5 — INSPECTION STATION MECH. EQUIP. ROOM 402
3/8" = 1'-0"

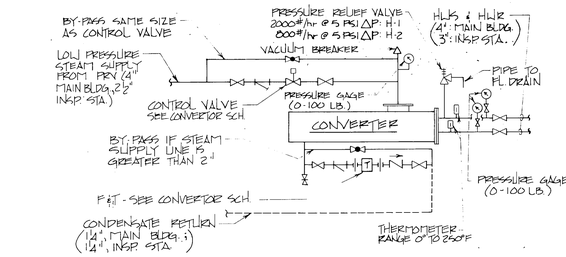

D M-3 M-5 — HOT WATER CONVERTER
M-5 NTS

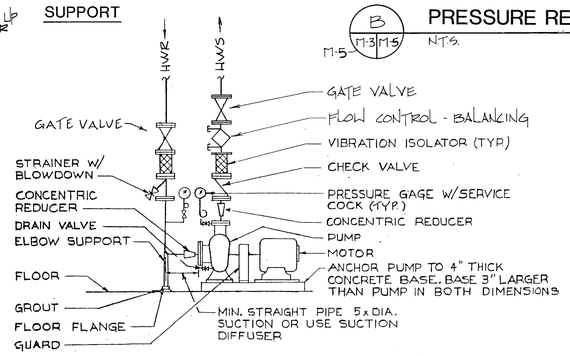

E M-3 M-5 — BASE MOUNTED PUMP
M-5 NTS

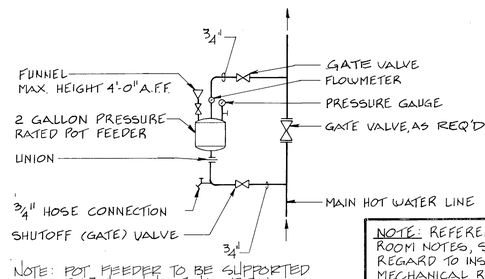

NOTE: POT FEEDER TO BE SUPPORTED BY ¾" CONNECTING PIPING.

F M-3 M-5 — POT FEEDER
M-5 NTS

NOTE: REFERENCE MECHANICAL ROOM NOTES, SHEET M-3 IN REGARD TO INSPECTION STATION MECHANICAL ROOM. ALL APPLICATIONS TYPICAL.

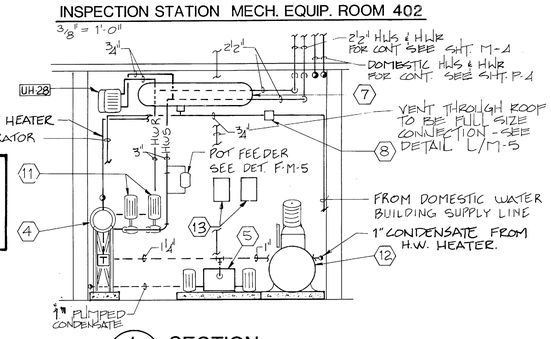

1 M-5 M-5 — SECTION
3/8" = 1'-0"

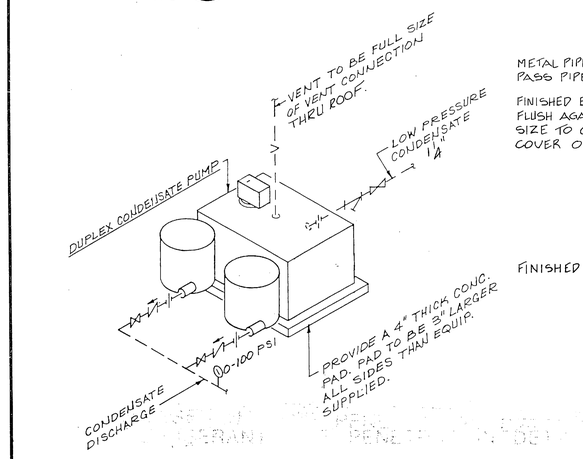

G M-3 M-5 — CONDENSATE RETURN UNIT
M-5 NTS

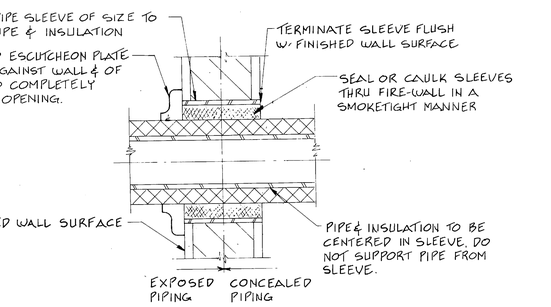

H M-1 M-5 — INTERIOR WALL SLEEVE
M-2, M-3, M-4 NTS

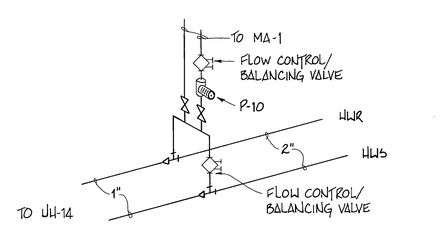

M M-2 M-5 — MAKE-UP AIR UNIT PIPING DETAIL
NTS

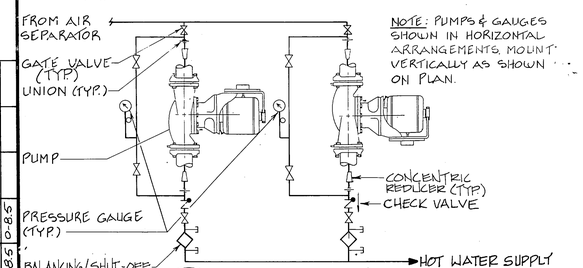

NOTE: PUMPS & GAUGES SHOWN IN HORIZONTAL ARRANGEMENTS. MOUNT VERTICALLY AS SHOWN ON PLAN.

J M-5 M-5 — INLINE PUMPS
NTS

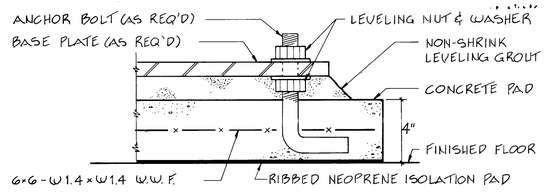

K M-3 M-5 — EQUIPMENT PAD
M-5 NTS

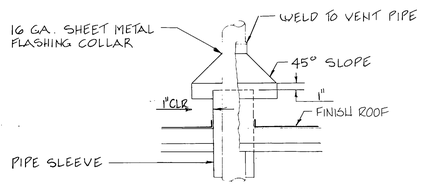

L M-3 M-5 — HOT VENT DETAIL
M-5 NO SCALE

KEYNOTES:

1. UNDERGROUND STEAM & CONDENSATE LINES BUILDING ENTRANCE. SEE DETAILS A & B ON M-11.
2. STEAM FLOW METER, 939 LBS/HR.. SEE DETAIL B ON M-5
3. PRESSURE REDUCING STATION. SEE DETAIL B/M-5 & PRV SCHEDULE SHEET M-3.
4. HOT WATER CONVERTER. SEE SCHEDULE SHEET M-3 & DETAIL D/M-5.
5. CONDENSATE RECEIVER SET. SEE PUMP SCHEDULE SHEET M-3 & DETAIL G/M-5.
6. AIR SEPARATOR, 3" FLANGED, 74 GPM
7. (1) 30 GALLON EXPANSION TANK.. MOUNT 8'-6" A.F.F. SUSPENDED FROM MEZZANINE DECK. MOUNT AS CLOSE AS POSSIBLE TO EAST INTERIOR WALL LOCATION IN PLAN SHOWN FOR CLARITY. SEE DETAIL A/M-5.
8. DOMESTIC WATER PRESSURE REDUCING VALVE & STRAINER. SEE DETAIL A THIS DRAWING.
9. MAIN BUILDING DOMESTIC WATER SUPPLY.
10. STEAM WATER HEATER. SEE DETAIL G ON P-5
11. HOT WATER CIRCULATING PUMPS. SEE DET. J/M-5. & PUMP SCHEDULE SHEET M-3.
12. AIR COMPRESSOR, AIR-3 SEE SCHEDULE AND DETAIL K/P5.
13. BUILDING MASTER UNIT AND DATA COLL. TERMINAL CAB. SEE SHEET M-8

FC 280

RECORD DRAWING LETTER DATED

M-5

OLSEN ASSOCIATES
RALEIGH, N. CAROLINA
ENGINEERS & ARCHITECTS

DEPARTMENT OF THE NAVY — NAVAL FACILITIES ENGINEERING COMMAND
ATLANTIC DIVISION
NAVAL STATION — NORFOLK, VIRGINIA

MARINE CORPS BASE, CAMP LEJEUNE, N.C.
FIELD MAINTENANCE COMPLEX

INSPECTION STATION MECH. ROOM & MECH. ROOM DETAILS

DES. EDB DR. RLP CHK. TBD
PROJ. MGR. DNL CH. ENGR.
SUBMITTED BY: DATE 3-6-87
FIRM MEMBER PRINCIPAL
EFD JOR. RVD
HD DATE DIR
APPROVED DATE
OFFICER IN CHARGE
APPROVED DATE 5/14/87
FOR EFD FOR COMMANDER NAVFAC

SIZE F — CODE IDENT. NO. — NAVFAC DRAWING NO. 4155683
CONSTR. CONTR. NO. N62470-85-B-5149
SCALE AS NOTED — SPEC. 05-85-5149 — SHEET 66 OF 93

EFD DWG. NO. 255683

0			
0			
0			
0	0	0-8.5	15-8.5
0	0	0-8.5	15-8.5

REVISIONS			
SYM	DESCRIPTION	DATE	APPROVED

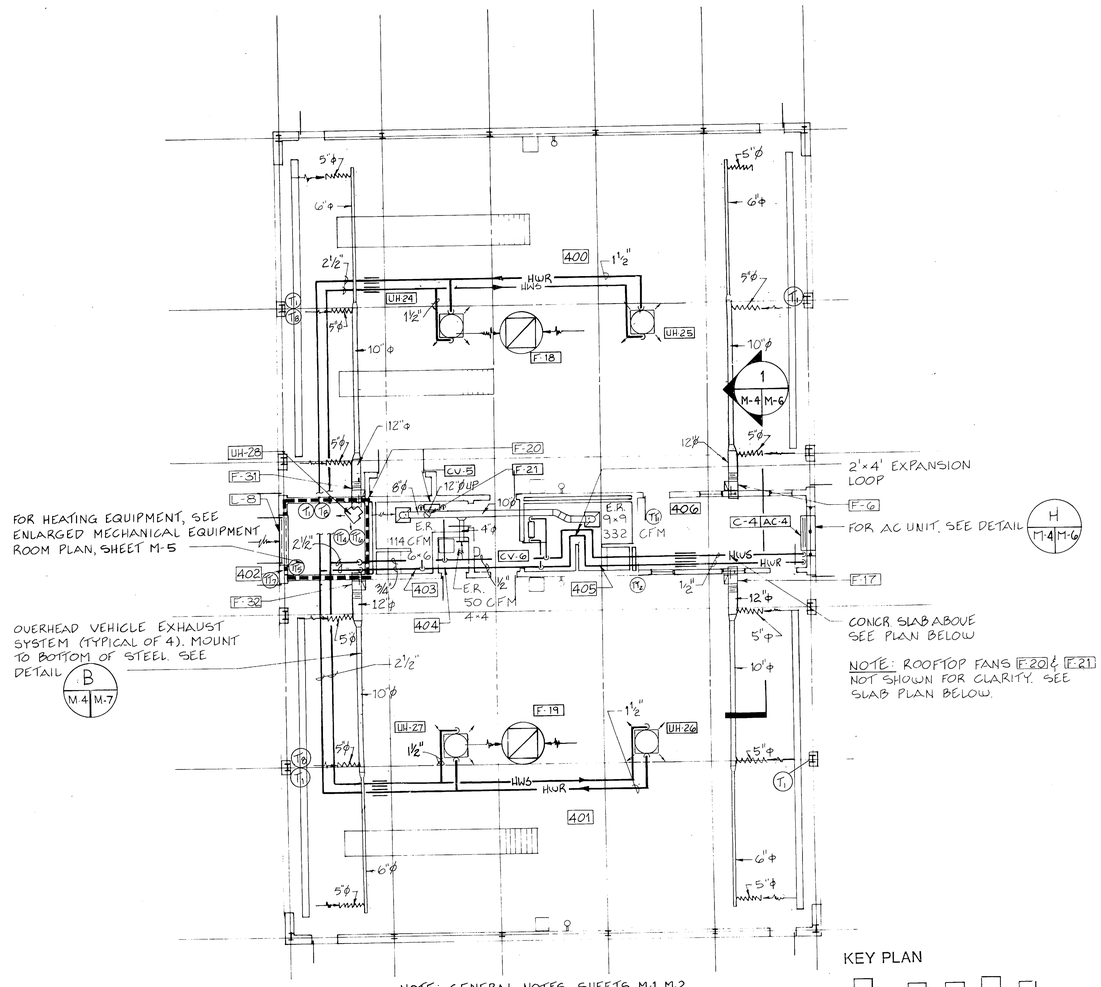

NOTE: GENERAL NOTES, SHEETS M-1, M-2, & M-3, APPLICABLE TO SHEET M-4.

INSPECTION STATION PLAN

1/8" = 1'-0"

KEY PLAN

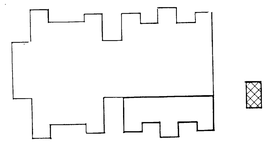

SPLIT-SYSTEM AIR CONDITIONER SCHEDULE

MARK	COOLING CAP. SENSIBLE	COOLING CAP. TOTAL	S.P.	CFM	VOLTAGE FAN COIL	VOLTAGE COMPR.	COND. KW FAN	COND. KW COMPR.	COOLING STAGES	COND. TEMP	EVAPORATOR AIR ENT. DB	EVAPORATOR AIR ENT. WB	EVAPORATOR AIR LVG. DB	EVAPORATOR AIR LVG. WB	MOTOR CONTR.	VENT. CFM	REMARKS
AC-2	14.2 MBH	19.3 MBH	.71	598	208-1φ	208-1φ	.06	2.33	ONE	120°F	79.4 F	67.1 F	57.8 F	56.7 F	INTEGR'L	71	
AC-3	39.4 MBH	52.3 MBH	1.07	1653	208-1φ	460-3φ	.25	4.07			79.5 F	66.8 F				204	

UNIT HEATER SCHEDULE

MARK	TYPE	CFM	BTU/HR.	FAN MOTOR HP	FAN MOTOR RPM	FAN MOTOR VOLTAGE	ENT. WATER TEMP.	TEMP. DIFF.	GPM	MT'G HT.	PIPE SIZE	ENT. AIR TEMP(F)	MOTOR CONTROLLER	REMARKS
UH-1	VERTICAL	4300	163000	1/2	1150	208-3φ	180°F	20°F	16.1	16'-0"	1 1/2"	65°	MAGNETIC	PROVIDE 2-WAY REVOLVING DISCH.
UH-2														
UH-3		3600	159000	1/4		115-1φ			16.0				MAN. MTR. STRT	
UH-4	CABINET	330	14000	1/30	1050				1.4	CEIL. HEIGHT	1/2"			RECESSED TO MOUNT IN LAY-IN CEIL.
UH-5	HORIZONT	340	11000	1/16	1550				1.2	8'-0"				
UH-6	VERTICAL	4300	163000	1/2	1150	208-3φ			16.1	16'-0"	1 1/2"		MAGNETIC	PROVIDE 2-WAY REVOLVING DISCH.
UH-7														
UH-8											1"			
UH-9		1590	48800	1/15	1050	115-1φ			5.0				MAN. MTR. STRT.	FIXED LOUVERED DISCHARGE
UH-10	HORIZONT.	630	17,200	1/25	1550				1.7	8'-0"	3/4"			
UH-11			15,000						1.5					
UH-12			19,600						2.0					
UH-13			17,200						1.7					
UH-14		1120	39,400	1/12					3.9		1"			
UH-15			37,000	1/25					3.7		3/4"			
UH-16			38,000						3.8					
UH-17	CABINET	250	6,100	1/30	1090				.61	CEIL. HEIGHT	1/2"			RECESSED TO MOUNT IN LAY-IN CEIL.
UH-18			9,600						.96					
UH-19	VERTICAL	1155	36900		1050				3.6	16'-0"	1"			FIXED LOUVERED DISCHARGE
UH-20	CABINET	330	19,400	1/15					1.9	CEIL. HEIGHT				RECESSED TO MOUNT IN LAY-IN CEILING
UH-21														
UH-22	HORIZONT	1120	46,000	1/12	1550				4.0	8'-0"				
UH-23	VERTICAL	4300	163,000	1/2	1150	208-3φ			16.1		1 1/2"		MAGNETIC	PROVIDE 2-WAY REVOLVING DISCH.
UH-24		5460	180000						18.0	16'-0"				FIXED LOUVERED DISCHARGE
UH-25														
UH-26														
UH-27														
UH-28	HORIZONT.	340	10,460	.016		115-1φ			1.0	8'-0"	1/2"		MAN. MTR. STRT	

HOT WATER CONVECTOR SCHEDULE

MARK	AVG. WATER TEMP. (F)	TUBE	FIN SIZE	FINS/FT	ROWS	HEIGHT	DEPTH	FLR. TO TOP	ACTIVE FIN LENGTH	ETR. AIR TEMP (F)	GPM	MBH	REMARKS
CV-1	170	1 1/4"	3 1/4"	60	1	20"	6"	24"	2'-0"	65	0.29	2.9	
CV-2						14"	6"	18"			0.23	2.3	
CV-3							4"				0.12	1.2	
CV-4												1.2	
CV-5												1.2	
CV-6						20"	6"	24"			0.26	2.6	

MAKE-UP AIR UNIT SCHEDULE

MARK	GPM	MBH	HEAD (FT.)	AIR TEMP. (F) ENTER	AIR TEMP. (F) LEAVE	WATER TEMP. (F) ENTER	WATER TEMP. (F) LEAVE	SUPPLY CFM	O.A. CFM	STATIC PRESSURE	FAN HP	V/PH	REMARKS
MA-1	355	355.5	14	40	65	180	160	13,168	7838	1.0"	5.0	460/3φ	

UNITARY AIR CONDITIONING SCHEDULE

MARK	CFM	EXT S.P.	COOLING CAP. SENS	COOLING CAP. TOTAL	EVAPORATOR AIR ENT. DB	EVAPORATOR AIR LVG. DB	EVAPORATOR AIR ENT. WB	EVAPORATOR AIR LVG. WB	KW FAN	KW COMPR	V/PH/HZ	COOL STAGES	MAX FACE VEL.	MOTOR CONTROLLER	VENT CFM	COND. TEMP	REMARKS
AC-1	2558	.89	65.2 MBH	88.2 MBH	80.0 F	56.8 F	66.9 F	55.6 F	0.75	5.4	460/3/60	TWO	285 FPM	INTEGRAL	123	120°F	PROVIDE ECONOMIZER PKG. ROOFTOP
AC-4	387	—	9.0 MBH	11.1 MBH	78.9 F	57.8 F	66.4 F	57.2 F	—	1.9	208/1/60	ONE	------		30	120°F	UNIT W/COIL E-4 THRU WALL UNIT

NOTES:
1. HORIZONTAL DUCTWORK TO RUN BETWEEN SLAB & LAY-IN CEILING BELOW.
2. PROVIDE HORIZONTAL FIRE DAMPERS AT DUCT PENETRATIONS THRU SLAB. SEE DETAIL E-M-7.
3. KEEP DUCT RISERS TIGHT TO WALL AS SHOWN.

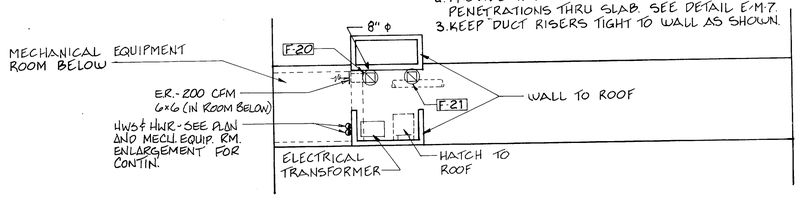

SLAB PLAN

1/8" = 1'-0"

HOT WATER COIL SCHEDULE

MARK	GPM	MBH	HEAD (FT)	AIR TEMP. (F) ENTER	AIR TEMP. (F) LEAVE	WATER TEMP. (F) ENTER	WATER TEMP. (F) LEAVE	CFM	FACE VEL	STATIC PRESSURE	COIL SIZE	REMARKS
C-1	3.7	36.6	10.3	65	83	180	160	2558	730	.37	36/14	DUCT MOUNTED
C-2	1.18	11.8	7.2					598	895		18/8	
C-3	2.03	20.3	8.0					1653	945		18/14	
C-4	.41	4.1	7.2					387	—		------	FURNISH IN AC-4

1/8" = 1' scale 5 0 5 10 15 20 feet

FC 280

RECORD DRAWING LETTER DATED

M-4

OLSEN ASSOCIATES
RALEIGH, N. CAROLINA
ENGINEERS & ARCHITECTS

DEPARTMENT OF THE NAVY — NAVAL FACILITIES ENGINEERING COMMAND
ATLANTIC DIVISION
NAVAL STATION — NORFOLK, VIRGINIA

DES EDB DR RLP CHK TBD
PROJ. MGR DNL CH. ENGR.
SUBMITTED BY — DATE 3-6-87
FIRM NEARER — PRINCIPAL
EFD JOR — RVD JJI
MD — DIR
APPROVED — DATE
OFFICER IN CHARGE
APPROVED — DATE
FOR EFD FOR COMMANDER NAVFAC

MARINE CORPS BASE, CAMP LEJEUNE, N.C.
FIELD MAINTENANCE COMPLEX

HVAC PLAN-INSPECTION STATION SCHEDULES

SIZE F — CODE IDENT NO. — NAVFAC DRAWING NO. 4155682
CONSTR. CONTR. NO. N62470-85-B-5149
SCALE AS NOTED — SPEC. 05-85-5149 — SHEET 68 OF 93

EFD DWG. NO. 255682

REVISIONS			
SYM	DESCRIPTION	DATE	APPROVED
1	REVISED AS-BUILT	1/7/91	[illegible]

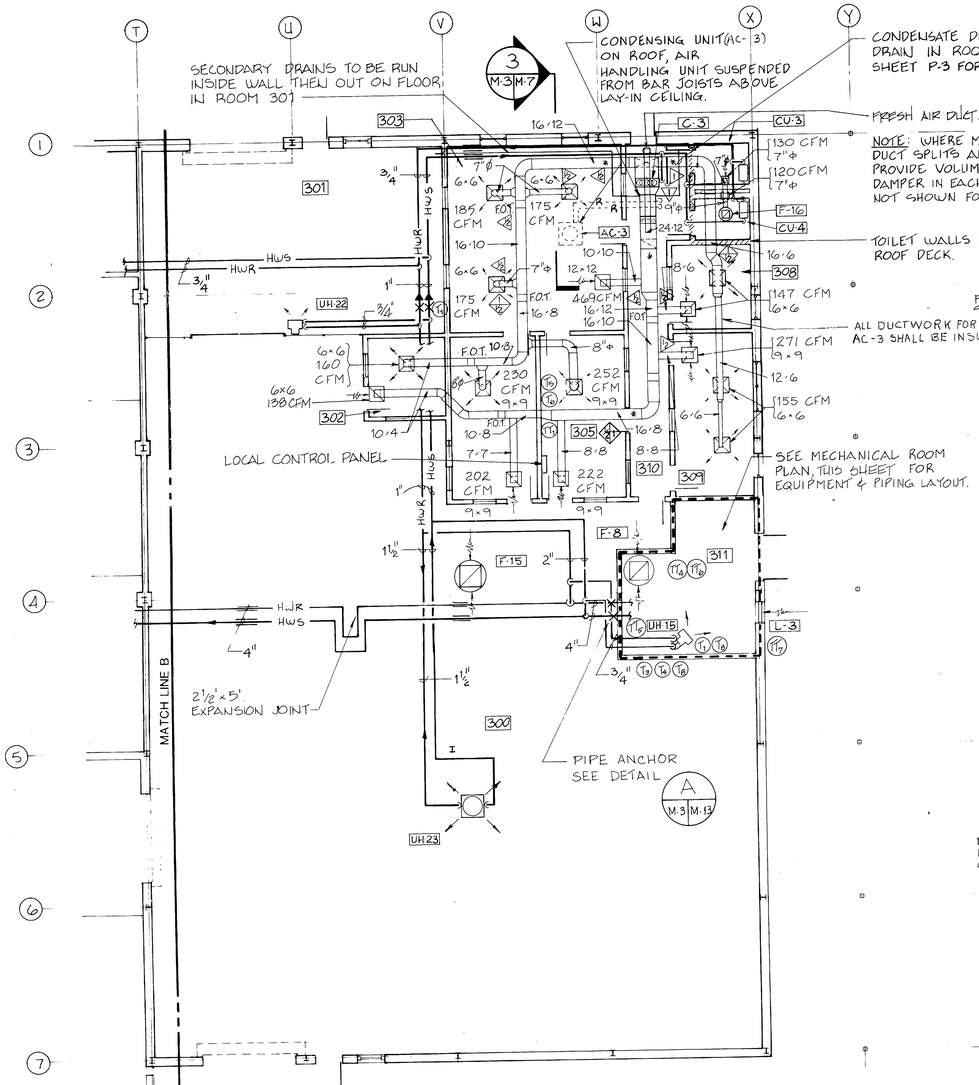

MMU AREA PLAN

1/8" = 1'-0"

KEY PLAN

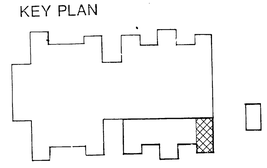

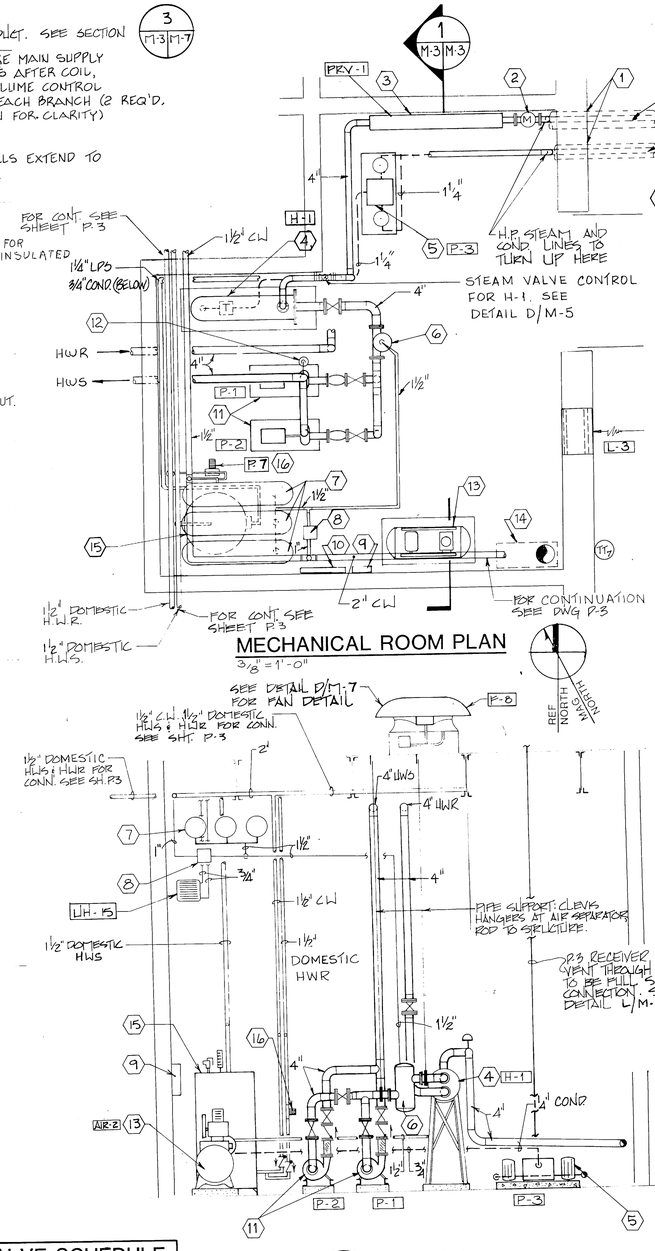

MECHANICAL ROOM PLAN

3/8" = 1'-0"

SECTION

1 M-3 M-3 3/8" = 1'-0"

KEYNOTES:

1. UNDERGROUND STEAM & CONDENSATE LINES BUILDING ENTRANCE. SEE DETAIL A & B/M-11
2. STEAM FLOW METER, 2060 LBS/HR. SEE DETAIL. B/M-5
3. PRESSURE REDUCING STATION. SEE DETAIL B-M-5 & PRV SCHEDULE THIS SHEET.
4. HOT WATER CONVERTER. SEE SCHEDULE THIS SHEET & DETAIL D-M-5.
5. CONDENSATE RECEIVER SET. SEE PUMP SCHEDULE THIS SHEET & DETAIL G-M-5.
6. AIR SEPARATOR, 4" FLANGED FOR 196 GPM.
7. (3) 30 GALLON EXPANSION TANKS. MOUNT 16'-6" A.F.F. SUSPENDED FROM ROOF DECK. SEE DETAIL A-M-5.
8. DOMESTIC WATER PRESSURE REDUCING VALVE & STRAINER. SEE DETAIL A, DWG. M-5
9. BUILDING MASTER. SEE SHEET M-8
10. DATA COLLECTION TERMINAL CABINET. SEE SHEET M-8
11. HOT WATER CIRCULATING PUMPS. SEE DETAIL E-M-5 & PUMP SCHEDULE THIS SHEET.
12. POT FEEDER. SEE DETAIL F-M-5.
13. AIR COMPRESSOR AIR-2. SEE SCHEDULE AND DETAIL J/P5
14. ALARM CHECK VALVE. SEE DETAIL L/P-5
15. STEAM WATER HEATER. SEE DETAIL G/P-5
16. DOMESTIC HOT WATER CIRCULATING PUMP. SEE DETAIL G/P-5

MECHANICAL ROOM NOTES:

1. FOR EQUIPMENT REQUIRING A CONCRETE PAD, REFER TO DETAIL K/M-5.
2. ALL STM. PRESS. RELIEF VALVES TO BE VENTED THRU ROOF. REFER TO DETAILS C-M-5 & L/M-5.
3. MECH. ROOM UNIT HEATERS & VENTILATING FANS NOT SHOWN ON ROOM PLAN FOR CLARITY. REFERENCE AREA PLANS AND SECTION 1/M-3 FOR LOCATION.
4. VENT WATER SYSTEM PRESSURE RELIEF VALVES TO FLOOR DRAINS.

GENERAL NOTES:

1. DUCT SIZES SHOWN REPRESENT NOMINAL INTERIOR DIMENSIONS. ALLOW FOR INSULATION AS REQUIRED.
2. FOR HEATING COILS, UNIT HEATERS, CONVECTORS, AND AIR-COND EQUIPMENT SEE SCHEDULES SHEET M-4.
3. FOR HOT WATER HEATING TERMINAL UNITS AND DUCT COIL PIPING CONNECTIONS, SEE DETAIL, SHEET M-6.
4. FOR TYPICAL ROOFTOP FAN INSTALLATION, SEE DETAIL D/M-7
5. FOR TYPICAL INTAKE LOUVER DETAIL SEE C/M-7.
6. FOR FANS AND LOUVERS SEE SCHEDULES, SHEET M-2.
7. FOR FIRE DAMPER INSTALLATION SEE DETAILS E & F, SHEET M-7.
8. FOR PIPE PENETRATIONS THRU WALLS SEE DETAIL H/M-5.

3/208/3
5/208/3

PUMP SCHEDULE

MARK	SERVICE	FLOW (GPM)	HEAD (FT)	HP/V/PH.	RPM	NEMA STARTER SIZE
P-1	HW CIRC.	196	30	3/208/3	1750	0
P-2	↓	↓	↓		↓	0
P-3	COND RET.	~~15~~ 9	—	~~1/2/115/1~~	3450	00
P-4	↓	~~15~~ 15	—		↓	00
P-5	HW CIRC.	74	20.8	3/4/208/3	1750	00
P-6	↓	↓	↓	↓		00
P-7	DOM. HW	10	30	3/4/208/3		00
P-8	↓	10	25	↓		00
P-10	BOOSTER	36	10	1/4/115/1	1750	00

PRESSURE REDUCING VALVE SCHEDULE

MARK	INLET PSIG	OUTLET PSIG	FLOW (PPH)	TEMP. °F	C.V.	REMARKS
PRV-1	80	15	2060	—	12.7	MAIN BUILDING
PRV-2	↓	↓	939	—	5.8	INSPECTION STATION

HOT WATER CONVERTOR SCHEDULE

	WATER SIDE						STEAM SIDE				REMARKS
MARK	GPM	ENT. WATER, °F	LVG. WATER, °F	BTU/HR	HEAD	FOULING FACTOR	WATER PD	PRESSURE	LBS/HR	TRAP CAP	
H-1	1960	160°	180°	1,960,000	1.4 FT.	.001	1.4	5 PSIG	1960	5880	
H-2	73.9	↓	↓	739,000	1.14 FT.	.001	1.14	↓	739	2217	

T-2	B-2.2	1/2.8.3	0-8.3	0		
	0	0	0	0		
	0	8-2.2	1/2.8.3	0-8.3		
				T-2		

FC 280

RECORD DRAWING LETTER DATED

M-3

OLSEN ASSOCIATES
RALEIGH, N. CAROLINA
ENGINEERS & ARCHITECTS

DEPARTMENT OF THE NAVY — NAVAL FACILITIES ENGINEERING COMMAND
ATLANTIC DIVISION
NAVAL STATION — NORFOLK, VIRGINIA

MARINE CORPS BASE, CAMP LEJEUNE, N.C.
FIELD MAINTENANCE COMPLEX

HVAC PLAN-MMU AREA
MECH. ROOM — SCHEDULES

DES EDB DR RLP CHK TBD
PROJ. MGR DNL CH. ENGR.
SUBMITTED BY [illegible] DATE 3-6-87
FIRM MEMBER — PRINCIPAL
EFD JOB — RVD JTT
HD RCB DIR KD
APPROVED — DATE
OFFICER IN CHARGE
APPROVED [illegible] DATE 5/1/87
FOR EFD FOR COMMANDER NAVFAC

SIZE F — CODE IDENT NO. — NAVFAC DRAWING NO 4155681
CONSTR. CONTR. NO. N62470-85-B-5149
SCALE AS NOTED — SPEC. 05-85-5149 — SHEET 64 OF 93

EFD DWG. NO. 255681

REVISIONS			
SYM	DESCRIPTION	DATE	APPROVED
1	REVISED AS-BUILT	1/7/91	[illegible]

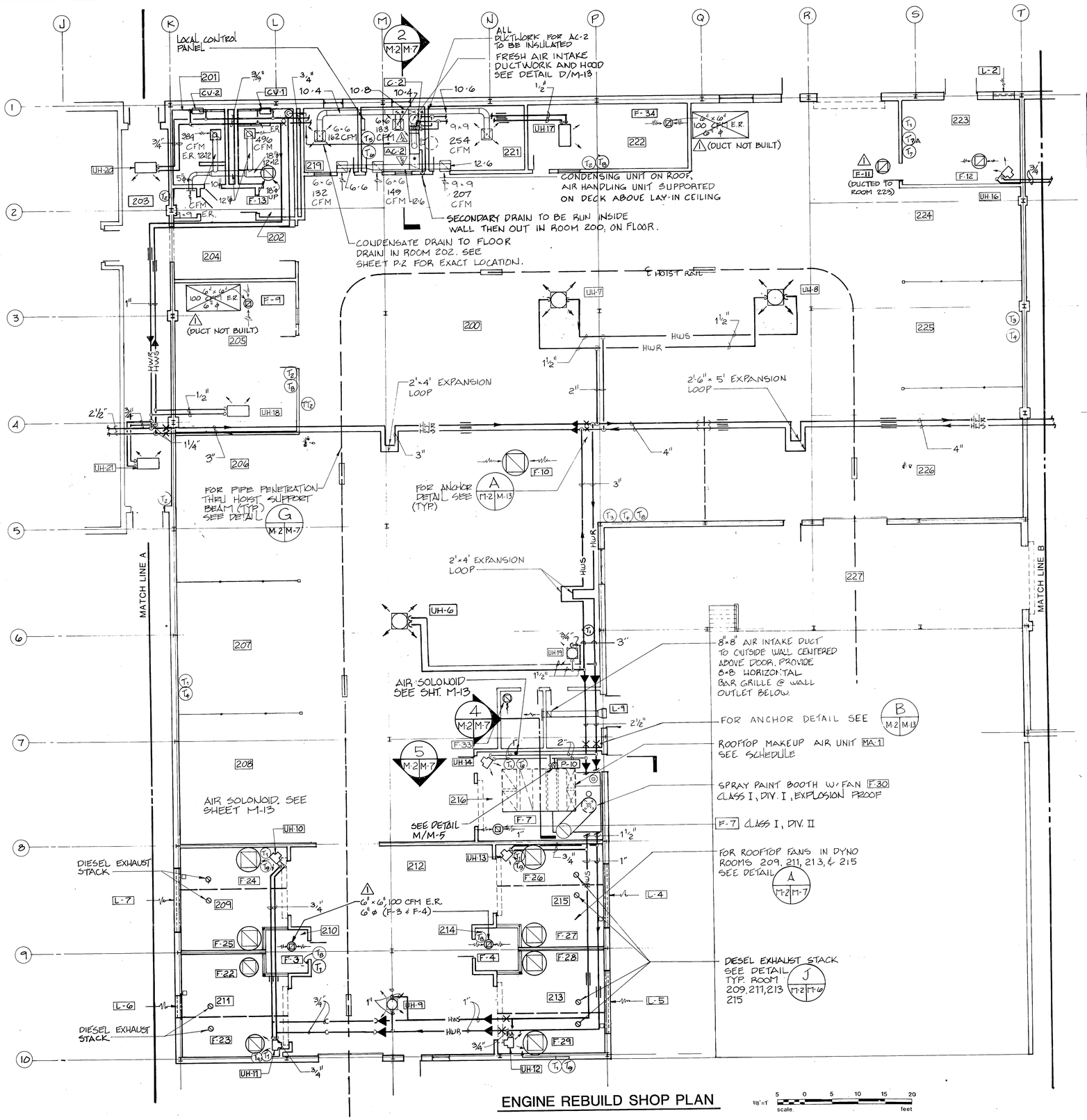

ENGINE REBUILD SHOP PLAN

1/8"=1' scale 5 0 5 10 15 20 feet

FAN SCHEDULE

MARK	CFM	S.P.	MOTOR H.P.	MOTOR VOLTS	MOTOR PHASE	MOTOR CYCLE	RPM	DAMPER	MOTOR CONTROLLER	TYPE
F-1	2370	.25	1/2	208	3ϕ	60HZ	1155	INTEGRAL	MAGNETIC	UPBLAST
F-2	1620	.125	1/8	115	1ϕ		500	GRAVITY	MAN. MTR. STRT.	BELT DR. PROP.
F-3	100		1/100				1300			DIR. DR. CENT.
F-4										
F-5	298	.25	1/30							
F-6	1200	2.55	1	208	3ϕ		2207	NONE	MAGNETIC	UTILITY SET
F-7	120	.125	1/100	115	1ϕ		1300	GRAVITY	MAN. MTR. STR.	DIR. DR. CENT.
F-8	490		1/12				470			BELT DR. PROP.
F-9	100		1/100							DIR. DR. CENT.
F-10	2100	.125	1/12	115	1ϕ		375	GRAVITY	MAN. MTR. STRT.	BELT DR. PROP.
F-11	2700	.25	1/3	208	3ϕ		785		MAGNETIC	" " CENT.
F-12										
F-13	964		1/4	115	1ϕ		740		MAN. MTR. STRT.	DIR. DR. CENT.
F-14	100	.125	1/100				1300			DIR. DR. CENT.
F-15	1000		1/12				380			BELT DR. CENT.
F-16	250	.25	1/30				1550			DIR. DR. CENT.
F-17	1200	2.55	1	208	3ϕ		2207	NONE	MAGNETIC	UTILITY SET
F-18	3300	.125	1/6	115	1ϕ		375	GRAVITY	MAN. MTR. STRT.	BELT DR. PROP.
F-19										
F-20	200		1/30				1550			DIR. DR. CENT.
F-21	500	.25	1/4				960			BELT DR. CENT.
*F-22	11,000	.50	3	460	3ϕ		749	INTEGRAL	MAGNETIC	UPBLAST
*F-23										
*F-24	19,700		5				562			
*F-25										
*F-26										
*F-27										
*F-28										
*F-29										
F-30	9250	.25	2				2085	ROOFCAP		TUBEAXIAL
F-31	1200	2.55	1	208	3ϕ		2207	NONE	MAGNETIC	UTILITY SET
F-32										
F-33	316	.125	1/30	115	1ϕ		1300	GRAVITY	MAN. MTR. STRT.	DIR. DR. CENT.
F-34	100		1/100							

LOUVER SCHEDULE

MARK	WIDTH	HT.	MATERIAL	SCREEN	FREE AREA	PRESS DROP	CFM	REMARKS
L-1	24"	48"	ALUMIN.	1/2" MESH	3.26 F.	.10" w.g.	2370	W/ MOTORIZED DAMPER
L-2	36"				5.46 F.		3850	" "
L-3	24"	16"			.65 S.F.		490	" "
L-4	144"	80"			41. S.F.		39400	" "
L-5								" "
L-6	88"				23 S.F.		22000	" "
L-7	144"				41 S.F.		39400	" "
L-8	24"	12"			2.75 S.F.		200	" "
L-9					42 S.F.		316	" "

* F-22 THRU F-29 PROVIDED W/ 2 SPEED MOTORS. OPERATING DATA SHOWN IS FOR HIGH SPEED PERFORMANCE. LOW SPEED RPM SHALL BE 50% OF HIGH SPEED RPM

GENERAL NOTES:

1. DUCT SIZES SHOWN REPRESENT NOMINAL INTERIOR DIMENSIONS. ALLOW FOR INSULATION AS REQUIRED.
2. FOR HEATING COILS, UNIT HEATERS, CONVECTORS, AND AIR-CONDITIONING EQUIPMENT SEE SCHEDULES SHEET M-4.
3. FOR HOT WATER HEATING TERMINAL UNITS AND DUCT COIL PIPING AND CONNECTIONS, SEE DETAIL, SHEET M-6.
4. FOR TYPICAL ROOFTOP FAN INSTALLATION, SEE DETAIL D/M-7.
5. FOR TYPICAL INTAKE LOUVER DETAIL SEE C/M-7.
6. FOR FANS AND LOUVERS SEE SCHEDULES, SHEET M-2.
7. FOR FIRE DAMPER INSTALLATION SEE DETAILS E & F, SHEET M-7.
8. FOR PIPE PENETRATIONS THRU WALLS SEE DETAIL H/M-5.

KEY PLAN

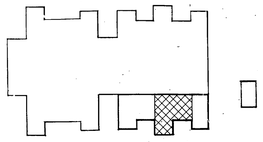

FC 280

RECORD DRAWING LETTER DATED

M-2

OLSEN ASSOCIATES
RALEIGH, N. CAROLINA
ENGINEERS & ARCHITECTS

DEPARTMENT OF THE NAVY — NAVAL FACILITIES ENGINEERING COMMAND
ATLANTIC DIVISION
NAVAL STATION — NORFOLK, VIRGINIA

MARINE CORPS BASE, CAMP LEJEUNE, N.C.
FIELD MAINTENANCE COMPLEX

HVAC PLAN-ENGINE REBUILD SHOP

DES. EDB DR. RLP CHK. TBD
PROJ. MGR. DNL CH. ENGR.
SUBMITTED BY — DATE 3-6-87
FIRM MEMBER — PRINCIPAL
EFD JCR — RVD JTE
HD RCB — DIR KO
APPROVED — DATE
OFFICER IN CHARGE
APPROVED — DATE 5/14/87
FOR EFD FOR COMMANDER NAVFAC

SIZE F — CODE IDENT. NO. — NAVFAC DRAWING NO. 4155680
CONSTR. CONTR. NO. N62470-85-B-5149
SCALE 1/8"=1'-0" — SPEC. 05-85-5149 — SHEET 63 OF 93

EFD DWG. NO. 255680

1	8-21	15-82	0-82	0
0	0	0	0-82	0
7-2	8 21	15-82	0-82	0

REVISIONS			
SYM	DESCRIPTION	DATE	APPROVED

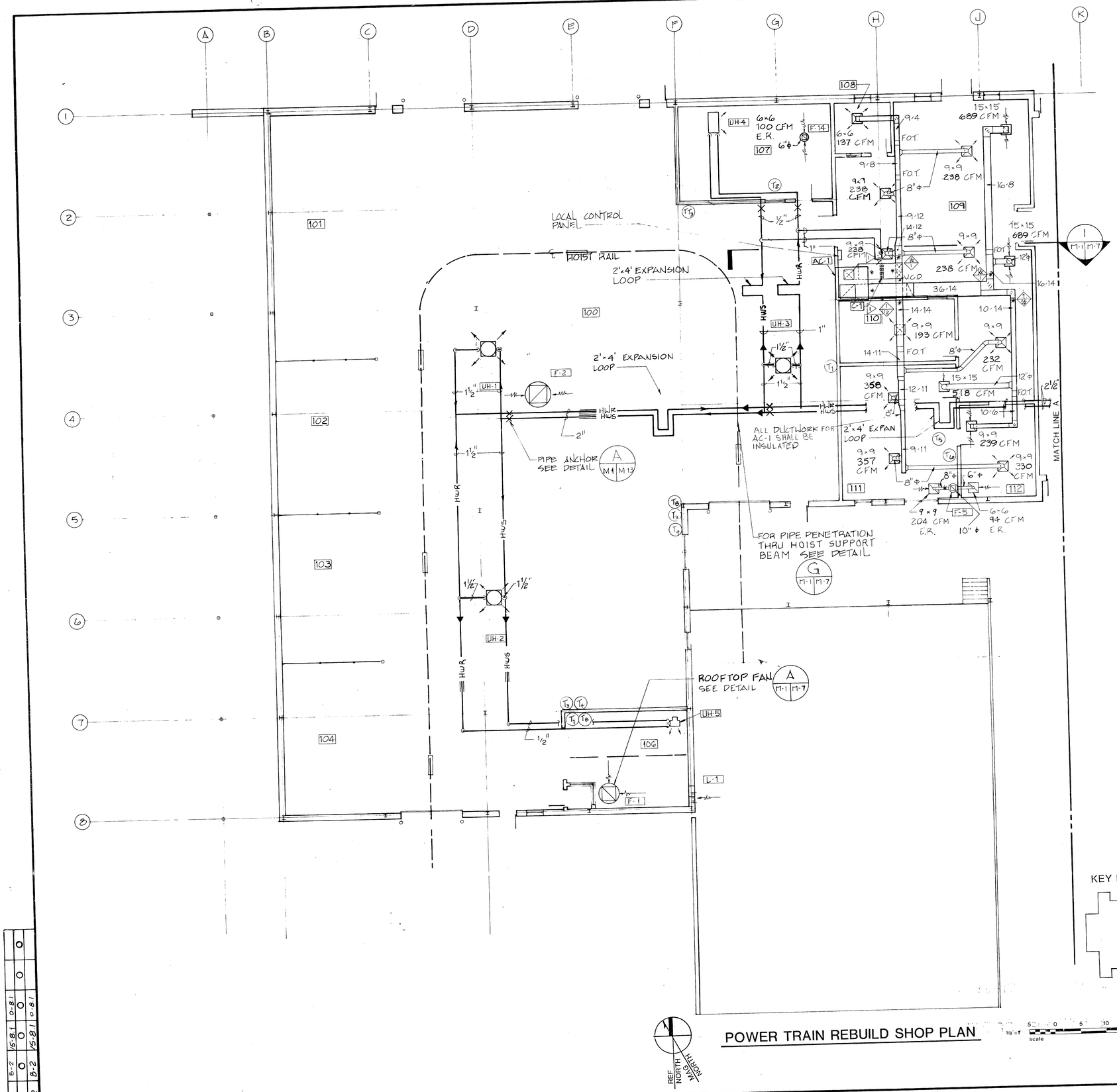

LEGEND

SCHEDULE MARK	UH-1	HORIZONTAL UNIT HEATER	
HIGH PRESSURE STEAM	80 PSI	VERTICAL UNIT HEATER	
HIGH PRESSURE CONDENSATE		HOT WATER CONVECTOR	
LOW PRESSURE STEAM	15 PSI	HIGH CAPACITY UNIT HEATER	
LOW PRESSURE CONDENSATE		THERMOSTAT	T
CONDENSATE DRAIN	D	TEMPERATURE TRANSMITTER	TT
HOT WATER SUPPLY	HWS	CABINET UNIT HEATER	
HOT WATER RETURN	HWR	FLAT ON TOP	F.O.T.
HOT WATER COIL		HORIZONTAL FIRE DAMPER	FD
GATE VALVE		VOLUME CONTROL DAMPER	VCD
CHECK VALVE		VERTICAL FIRE DAMPER	FD
GLOBE VALVE		SPLITTER DAMPER	
3-WAY CONTROL VALVE		SUPPLY DIFFUSER SIZE AS INDICATED	NECK SIZE CFM
PRESSURE REDUCING VALVE		RETURN GRILLE SIZE AS INDICATED	NECK SIZE CFM
BUTTERFLY VALVE		EXHAUST REGISTER SIZE AS INDICATED	E.R. NECK SIZE CFM
BALANCING COCK		PRESSURE-VELOCITY CLASSIFICATION OF DUCT	OR
STEAM OR COND. TRAP	T	ROOF TOP EXHAUST FAN	
STRAINER		TEST POINTS FOR BAL. OF AIR DISTRIBUTION	*
UNION		DUCT EXTRACTOR	
PRESSURE GAUGE		REFRIGERANT LINES	R
PIPE REDUCER		PIPE GUIDE	
PIPE ANCHOR		CONNECT NEW TO EXISTING	

GENERAL NOTES:

1. DUCT SIZES SHOWN REPRESENT NOMINAL INTERIOR DIMENSIONS. ALLOW FOR INSULATION AS REQUIRED.
2. FOR HEATING COILS, UNIT HEATERS, CONVECTORS, AND AIR-CONDITIONING EQUIPMENT SEE SCHEDULES SHEET M-4.
3. FOR HOT WATER HEATING TERMINAL UNITS AND DUCT COIL PIPING AND CONNECTIONS, SEE DETAIL, SHEET M-6.
4. FOR TYPICAL ROOFTOP FAN INSTALLATION, SEE DETAIL D/M-7.
5. FOR TYPICAL INTAKE LOUVER DETAIL SEE C/M-7.
6. FOR FANS AND LOUVERS SEE SCHEDULES, SHEET M-2.
7. FOR FIRE DAMPER INSTALLATION SEE DETAILS E & F, SHEET M-7.
8. FOR PIPE PENETRATIONS THRU WALLS SEE DETAIL H/M-5.

DESIGN CONDITIONS				
AREA	INDOOR TEMP.		OUTDOOR TEMP.	
	WINTER	SUMMER	WINTER	SUMMER
SHOP & STORAGE	65°db	—	23°db	90°db/79°wb
ADMINISTRATION	68°db	78°db/67°wb	23°db	90°db/79°wb

KEY PLAN

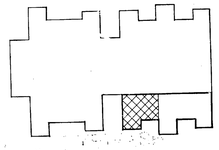

REF NORTH
MAGNETIC NORTH

POWER TRAIN REBUILD SHOP PLAN

1/8" = 1'-0" scale

FC 280

RECORD DRAWING LETTER DATED

M-1

OLSEN ASSOCIATES
RALEIGH, N. CAROLINA
ENGINEERS & ARCHITECTS

DEPARTMENT OF THE NAVY — NAVAL FACILITIES ENGINEERING COMMAND
ATLANTIC DIVISION
NAVAL STATION — NORFOLK, VIRGINIA

MARINE CORPS BASE, CAMP LEJEUNE, N.C.
FIELD MAINTENANCE COMPLEX

HVAC PLAN-POWER TRAIN REBUILD SHOP

DES EDB DR RLP CHK TBD
PROJ. MGR DNL CH. ENGR
SUBMITTED BY DATE 3-6-87
FIRM MEMBER PRINCIPAL
EFD JCR RVD JTT
HD RLP DIR KD
APPROVED DATE
OFFICER IN CHARGE
APPROVED DATE 3/11/87
FOR EFD FOR COMMANDER NAVFAC

SIZE F | CODE IDENT NO. | NAVFAC DRAWING NO 4155679
CONSTR. CONTR. NO. N62470-85-B-5149
SCALE 1/8" = 1'-0" | SPEC. 05-85-5149 | SHEET 62 OF 93

EFD DWG. NO. 255679

T-2	0	T-2	0	15-8.1	0-8.1	0	0
B-2	0	B-2	0	15-8.1	0-8.1	0	0

Lawrence

REVISIONS			
SYM	DESCRIPTION	DATE	APPROVED

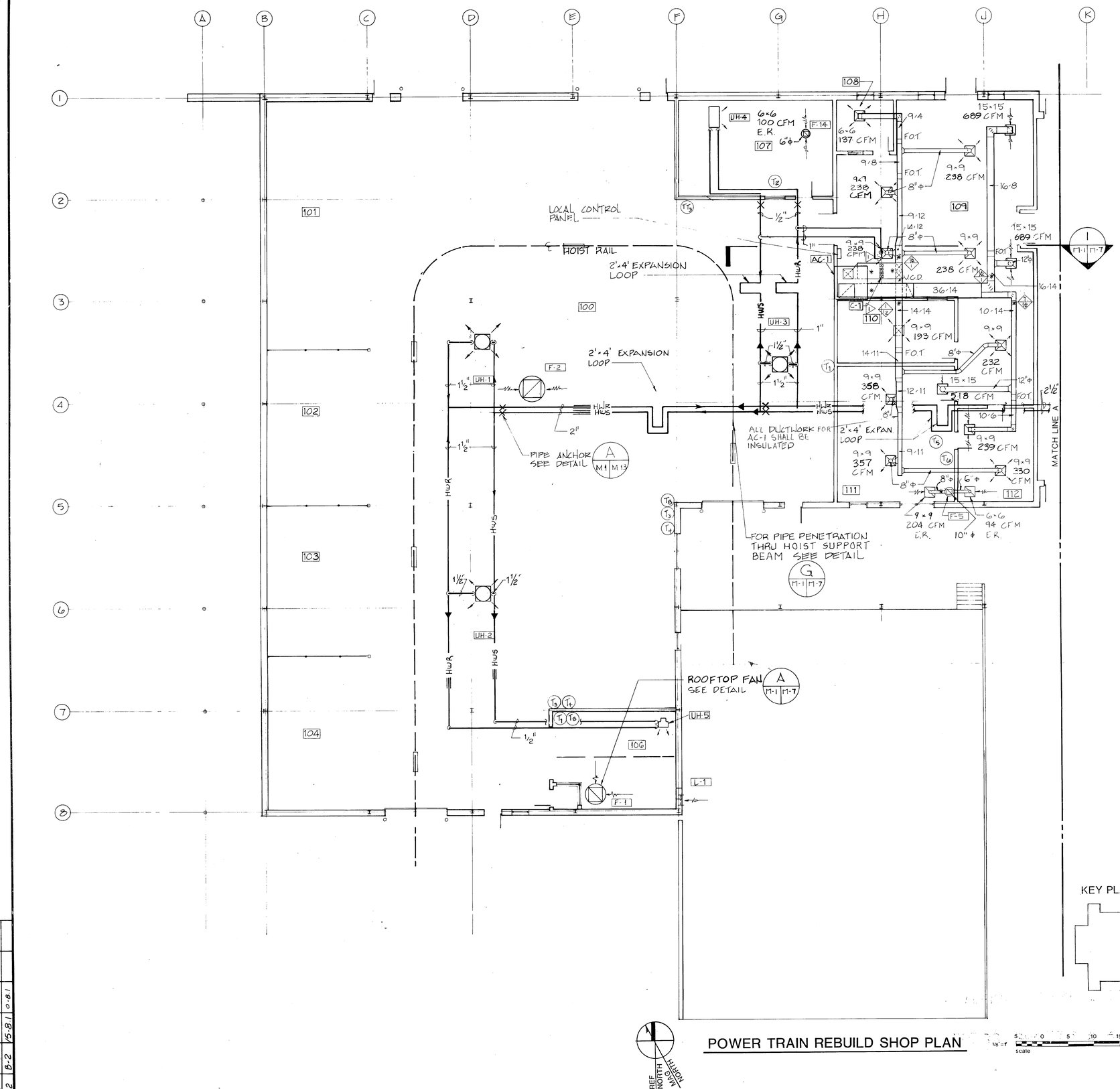

LEGEND

SCHEDULE MARK	UH-1	HORIZONTAL UNIT HEATER	
HIGH PRESSURE STEAM	80 PSI	VERTICAL UNIT HEATER	
HIGH PRESSURE CONDENSATE		HOT WATER CONVECTOR	
LOW PRESSURE STEAM	15 PSI	HIGH CAPACITY UNIT HEATER	
LOW PRESSURE CONDENSATE		THERMOSTAT	T
CONDENSATE DRAIN	D	TEMPERATURE TRANSMITTER	TT
HOT WATER SUPPLY	HWS	CABINET UNIT HEATER	
HOT WATER RETURN	HWR	FLAT ON TOP	F.O.T.
HOT WATER COIL		HORIZONTAL FIRE DAMPER	FD
GATE VALVE		VOLUME CONTROL DAMPER	V.C.D
CHECK VALVE		VERTICAL FIRE DAMPER	FD
GLOBE VALVE		SPLITTER DAMPER	
3-WAY CONTROL VALVE		SUPPLY DIFFUSER SIZE AS INDICATED	NECK SIZE CFM
PRESSURE REDUCING VALVE		RETURN GRILLE SIZE AS INDICATED	NECK SIZE CFM
BUTTERFLY VALVE		EXHAUST REGISTER SIZE AS INDICATED	E.R. NECK SIZE CFM
BALANCING COCK		PRESSURE-VELOCITY CLASSIFICATION OF DUCT	OR
STEAM OR COND. TRAP	T	ROOF TOP EXHAUST FAN	
STRAINER		TEST POINTS FOR BAL. OF AIR DISTRIBUTION	
UNION		DUCT EXTRACTOR	
PRESSURE GAUGE		REFRIGERANT LINES	R
PIPE REDUCER		PIPE GUIDE	
PIPE ANCHOR		CONNECT NEW TO EXISTING	

GENERAL NOTES:

1. DUCT SIZES SHOWN REPRESENT NOMINAL INTERIOR DIMENSIONS. ALLOW FOR INSULATION AS REQUIRED.
2. FOR HEATING COILS, UNIT HEATERS, CONVECTORS, AND AIR-CONDITIONING EQUIPMENT SEE SCHEDULES SHEET M-4.
3. FOR HOT WATER HEATING TERMINAL UNITS AND DUCT COIL PIPING AND CONNECTIONS, SEE DETAIL, SHEET M-6.
4. FOR TYPICAL ROOFTOP FAN INSTALLATION, SEE DETAIL D/M-7.
5. FOR TYPICAL INTAKE LOUVER DETAIL SEE C/M-7.
6. FOR FANS AND LOUVERS SEE SCHEDULES, SHEET M-2.
7. FOR FIRE DAMPER INSTALLATION SEE DETAILS E & F, SHEET M-7.
8. FOR PIPE PENETRATIONS THRU WALLS SEE DETAIL H/M-5.

DESIGN CONDITIONS				
AREA	INDOOR TEMP.		OUTDOOR TEMP.	
	WINTER	SUMMER	WINTER	SUMMER
SHOP & STORAGE	65°db	—	23°db	90°db/79°wb
ADMINISTRATION	68°db	78°db/67°wb	23°db	90°db/79°wb

KEY PLAN

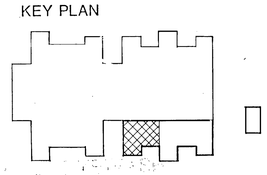

POWER TRAIN REBUILD SHOP PLAN

REF NORTH MAG NORTH

1/8" = 1' scale — 5 0 5 10 15 20 feet

FC 280

RECORD DRAWING LETTER DATED

M-1

OLSEN ASSOCIATES
RALEIGH, N. CAROLINA
ENGINEERS & ARCHITECTS

DEPARTMENT OF THE NAVY — NAVAL FACILITIES ENGINEERING COMMAND
ATLANTIC DIVISION
NAVAL STATION — NORFOLK, VIRGINIA

MARINE CORPS BASE, CAMP LEJEUNE, N.C.
FIELD MAINTENANCE COMPLEX

HVAC PLAN-POWER TRAIN REBUILD SHOP

DES. EDB | DR. RLP | CHK. TBD
PROJ. MGR. DNL | CH. ENGR.
SUBMITTED BY: DATE 3-6-87
FIRM MEMBER | PRINCIPAL
EFD JDR | RVD. JJI
HD RCC | DIR KS
APPROVED | DATE
OFFICER IN CHARGE
APPROVED DATE 3/9/87
FOR EFD FOR COMMANDER NAVFAC

SIZE F | CODE IDENT. NO. | NAVFAC DRAWING NO. 4155679
CONSTR. CONTR. NO. N62470-85-B-5149
SCALE 1/8" = 1'-0" | SPEC. 05-85-5149 | SHEET 62 OF 93

EFD DWG. NO. 255679

T-6	0	0	0	0-8.1	0-8.1	0	0
T-2	0	0	0	15-8.1	15-8.1	0	0

REVISIONS			
SYM	DESCRIPTION	DATE	APPROVED

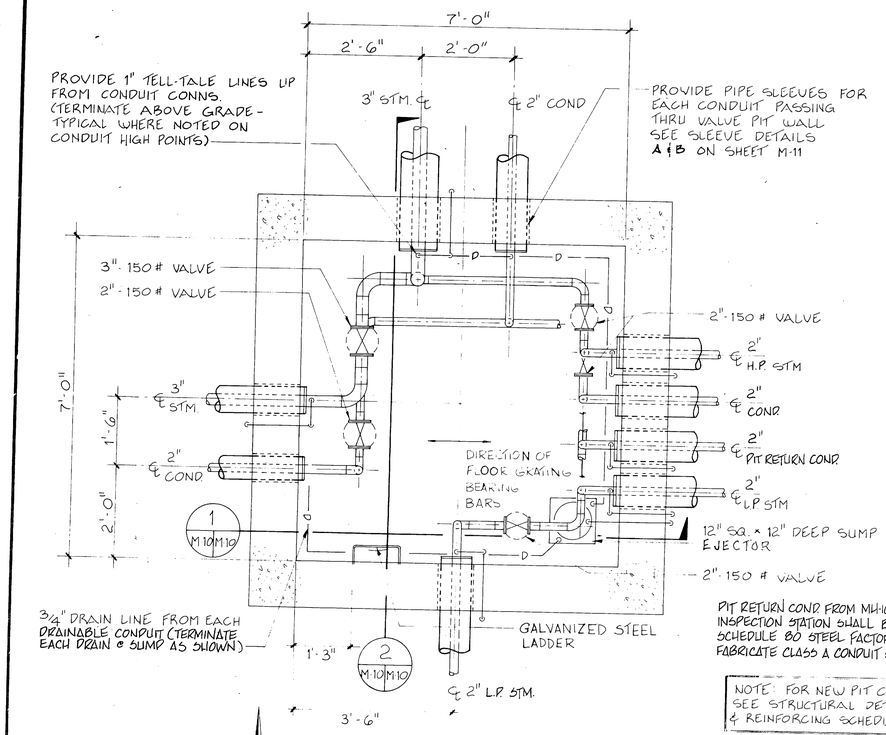

PIT RETURN COND FROM MH-10 TO INSPECTION STATION SHALL BE SCHEDULE 80 STEEL FACTORY FABRICATE CLASS A CONDUIT SYSTEM

NOTE: FOR NEW PIT CONSTRUCTION SEE STRUCTURAL DETAILS, PLANS, & REINFORCING SCHEDULE, SHEET M-11

PLAN-NEW VALVE PIT NO. 10

SCALE: 3/4" = 1'-0"

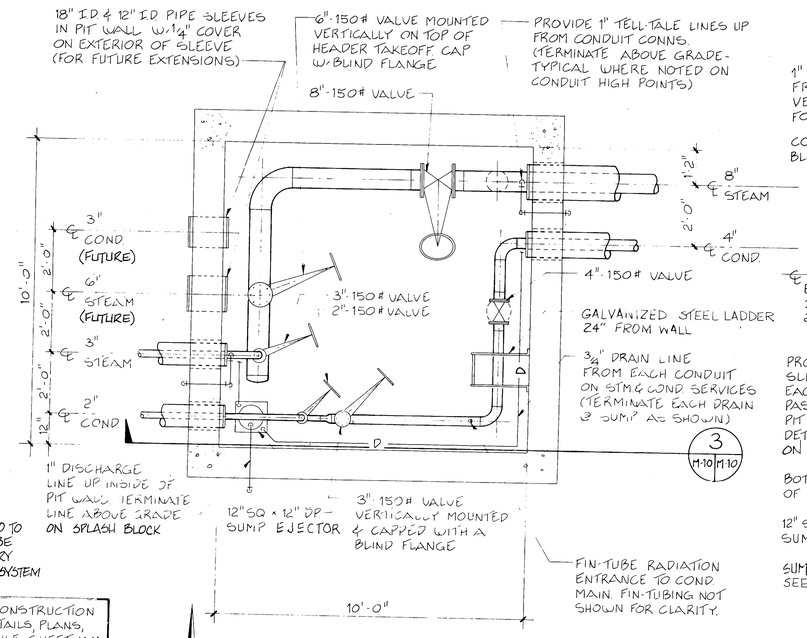

PLAN-NEW VALVE PIT NO. 9

SCALE: 1/2" = 1'-0"

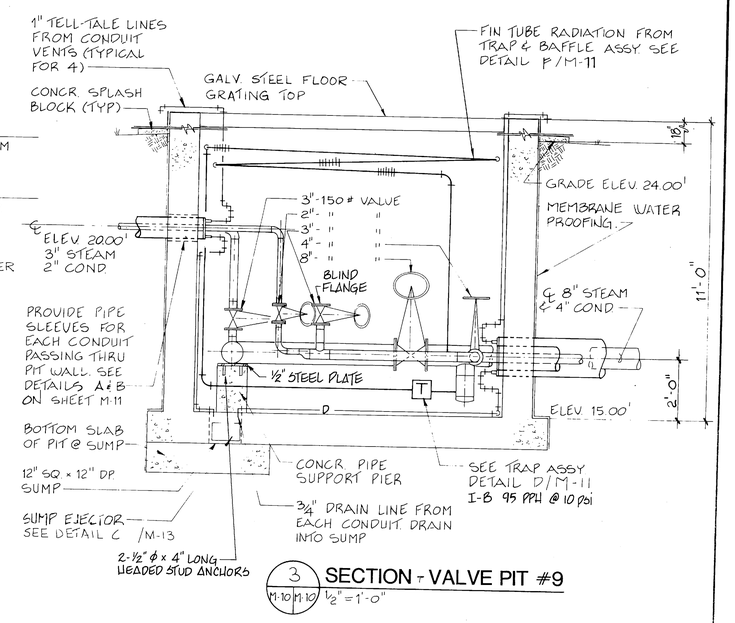

3 SECTION - VALVE PIT #9

M-10 M-10 1/2" = 1'-0"

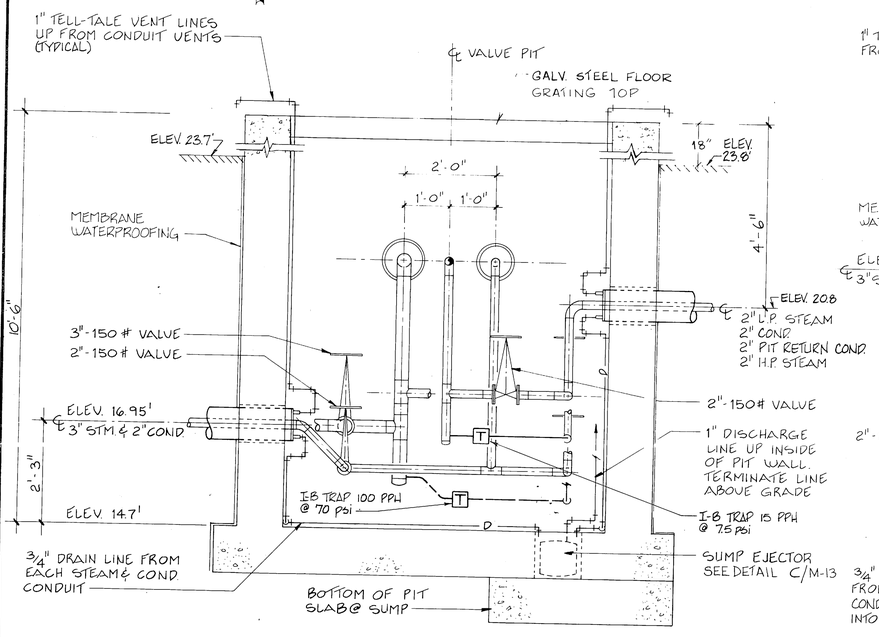

1 SECTION-VALVE PIT #10

M-10 M-10 3/4" = 1'-0"

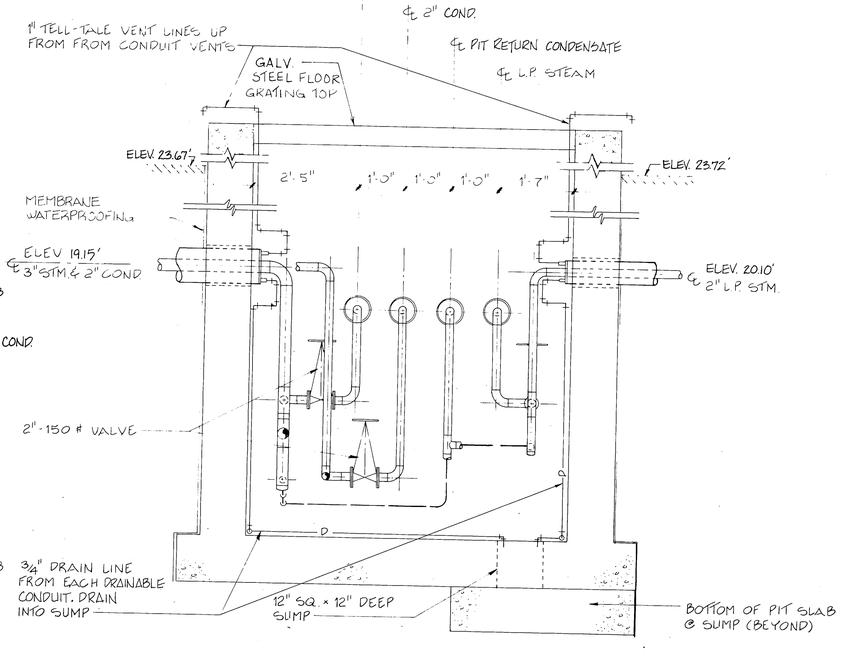

2 SECTION-VALVE PIT #10

M-10 M-10 3/4" = 1'-0"

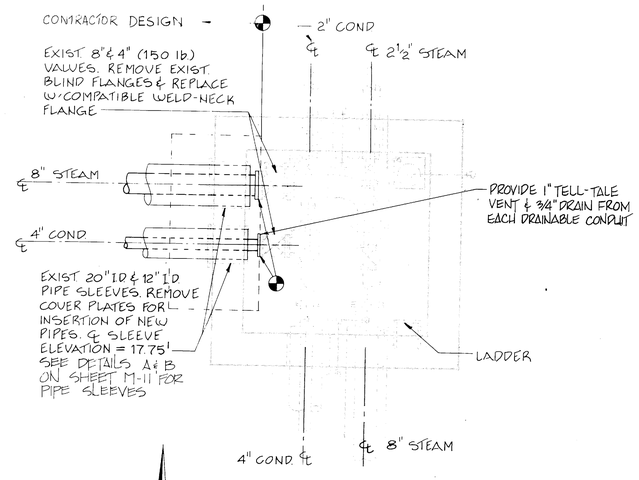

PLAN-EXIST. VALVE PIT NO. 8

SCALE: 1/2" = 1'-0"

3/4" = 1'-0" 1/2" = 1'-0" scale feet

FC280

RECORD DRAWING LETTER DATED

M-10

OLSEN ASSOCIATES
RALEIGH, N. CAROLINA
ENGINEERS & ARCHITECTS

DEPARTMENT OF THE NAVY — NAVAL FACILITIES ENGINEERING COMMAND
ATLANTIC DIVISION
NAVAL STATION — NORFOLK, VIRGINIA

DES. EDB DR. BPM CHK. TBD
PROJ. MGR. DNL CH. ENGR.
SUBMITTED BY DATE 3-6-87 PRINCIPAL
FIELD MEMBER
EFD SUPR. RVD
HD RCB DIR
APPROVED DATE
OFFICER IN CHARGE

MARINE CORPS BASE, CAMP LEJEUNE, N.C.
FIELD MAINTENANCE COMPLEX

MANHOLE DETAILS

SIZE F | CODE IDENT. NO. | NAVFAC DRAWING NO. 4155688

T-2	15-12-1	0-2-1	0
T-2	15-12-1	0-2-1	0
T-2	15-12-1	0-2-1	0

REVISIONS			
SYM	DESCRIPTION	DATE	APPROVED

CONTRACTOR'S OPTION: PROVIDE DOWELS FOR VERT. WALL BARS - SIZE TO MATCH VERT. REINF. LAP MIN. 40 BAR DIA.

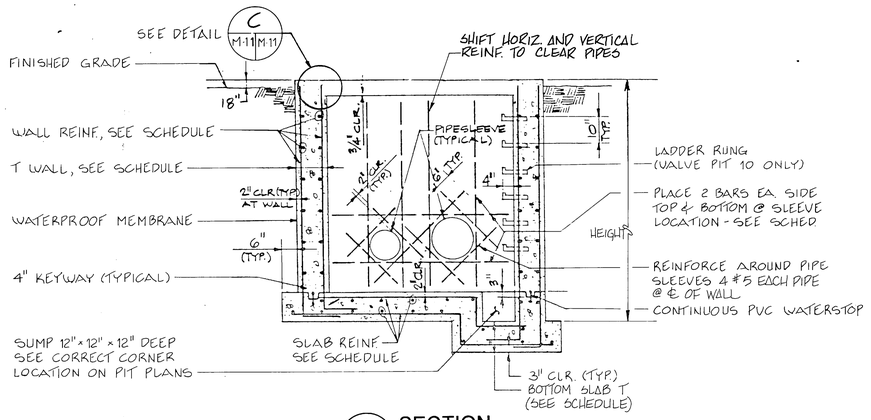

1 M-11 M-11 **SECTION** 1/2" = 1'-0"

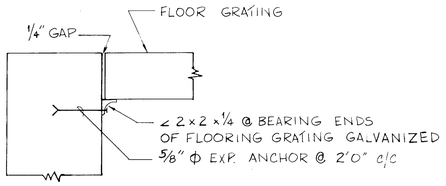

C M-10 M-11 **CORNER DETAIL** 1 1/2" = 1'-0"
M-11

NEW VALVE PIT SCHEDULE (SEE NOTE BELOW)											
NEW PIT NO.	L_1	L_2	HEIGHT	THICKNESS BOTTOM SLAB (T)	THICKNESS WALL (T)	WALL REINFORCING				BOTTOM SLAB REINFORCING	
						VERT.		HORIZ.			
						IN. FACE	OUT. FACE	IN. FACE	OUT. FACE	TOP E.W.	BOTTOM E.W.
9	10'	10'	11'-0"	1'-0"	1'-0"	#5 @ 12"	→		→		
10	7'	7'	10'-6"	1'-0"	1'-0"	#5 @ 12"	→		→		

NOTE: 1-SEE PIPING PLANS, SECTIONS & DETAILS FOR VALVE PITS TO COORDINATE ALL REINFORCEMENTS, SLEEVES, ANCHORS, SUPPORTS IN BOTTOM OF PITS, ETC.
2-PROVIDE #5 CORNER BARS @ 12" TO MATCH HORIZ. REINFORCING IN OUTSIDE FACE OF WALLS. LAP 1'-8" WITH HORIZ. REINFORCING.

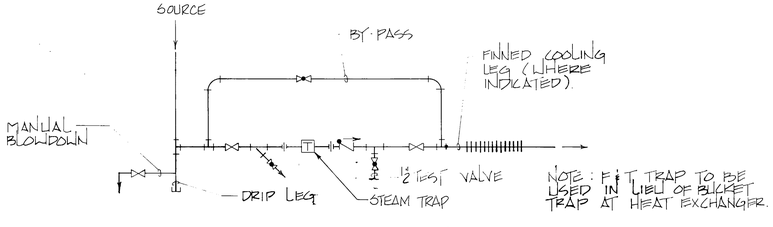

D M-10 M-11 **STEAM TRAP ASSY.** NO SCALE
M-5
P-5

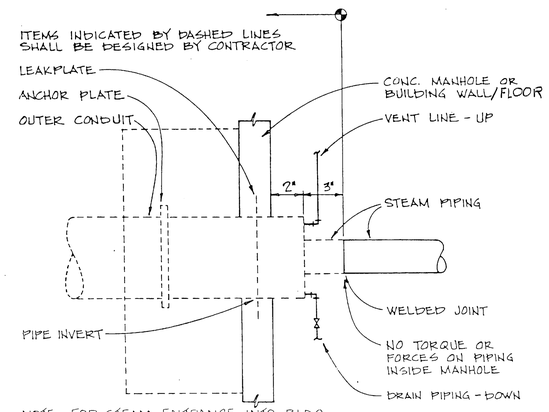

NOTE: FOR STEAM ENTRANCE INTO BLDG., ELIMINATE DRAIN AND EXTEND VENT TO FLOOR. CONTRACTOR SHALL EXTEND PIPING AND OUTER CONDUIT UP THROUGH FLOOR

A M-10 M-11 **STEAM CONDUIT SYSTEM** NOT TO SCALE
M-3
M-5

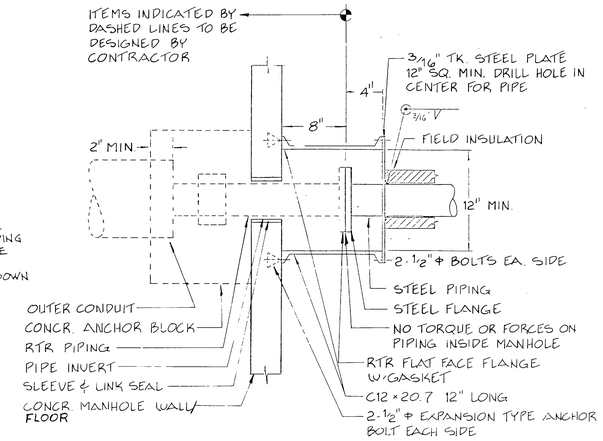

NOTE: FOR CONDENSATE EXIT FROM BLG., EXTEND PIPING AND OUTER CONDUIT UP THROUGH FLOOR AND THEN INSTALL STEEL SUPPORT.

B M-10 M-11 **CONDENSATE CONDUIT SYSTEM** NOT TO SCALE
M-3
M-5

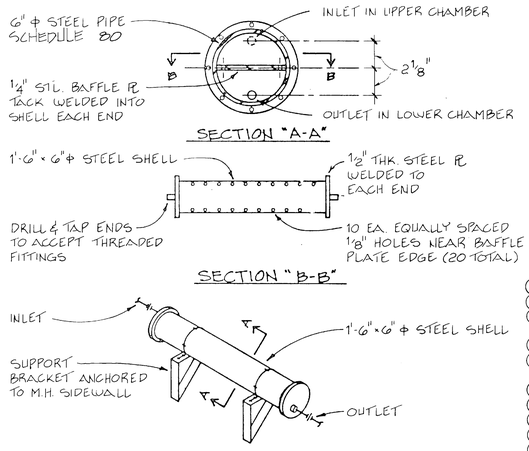

E M-11 M-11 **BAFFLE CHAMBER DETAIL** NOT TO SCALE

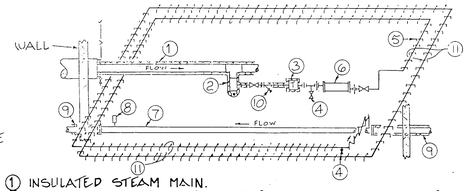

1. INSULATED STEAM MAIN.
2. FULL SIZE DRIP POCKET AS DEEP AS DESIGN PERMITS, BUT NOT LESS THAN 8".
3. INVERTED BUCKET TRAP W/FORMED REMOVABLE INSULATION. TRAP SIZE AS REQ'D FOR 3× STEAM LOAD.
4. 1/2" TEST CONNECTION.
5. 50 L.F. OF 2" FIN TUBE RADIATION W/EXPANDED STEEL COVER AROUND INSIDE WALL OF STEAM PIT (1000 BTUH/FT @ 200F AVG. WATER TEMP., 65 F EAT)
6. CONDENSATE EXPANSION BAFFLE CHAMBER VESSEL (UNINSULATED). SEE DET. E/M-11.
7. SECTION OF INSULATED STEEL PIPE IN VALVE PIT.
8. THERMOMETER 50-300F.
9. FRP OR RTR CONDENSATE RETURN MAIN - INSULATED.
10. FULL SIZE STRAINER W/BLOWDOWN VALVE (USED TO AID IN COLD START-UP. VENTING)
11. ROUTE ABOVE ELEV OF CONDENSATE MAIN.

F M-10 M-11 **H.P. COND. DRIP TO RTR/FRP SYSTEM** NOT TO SCALE

FC 280

T-3	15/12/2	0	0	0	0	0/12/2
T-2	15/12/2	0	0	0	0	0/12/2

1 1/2" = 1'-0" scale 1 0 1 2 feet

1/2" = 1'-0" scale 1 0 1 2 3 4 5 feet

RECORD DRAWING LETTER DATED

M-11

OLSEN ASSOCIATES
RALEIGH, N. CAROLINA
ENGINEERS & ARCHITECTS

DEPARTMENT OF THE NAVY — NAVAL FACILITIES ENGINEERING COMMAND
ATLANTIC DIVISION
NAVAL STATION — NORFOLK, VIRGINIA

MARINE CORPS BASE, CAMP LEJEUNE, N.C.
FIELD MAINTENANCE COMPLEX

STEAM DETAILS

DES. EDB DR. BPM CHK. TBD
PROJ. MGR. DNL CH. ENGR.
SUBMITTED BY DATE 3-6-87
FIRM MEMBER PRINCIPAL
EFD J.P.R. RVD. J.T.I.
HD. RCB DIR. KD
APPROVED DATE
OFFICER IN CHARGE
APPROVED 5/14/87
FOR EFD FOR COMMANDER NAVFAC

SIZE F | CODE IDENT. NO. | NAVFAC DRAWING NO. 4155689
CONSTR. CONTR. NO. N62470-85-B-5149
SCALE AS NOTED | SPEC. 05-85-5149 | SHEET 72 OF 93

EFD DWG. NO. 255689

REVISIONS			
SYM	DESCRIPTION	DATE	APPROVED

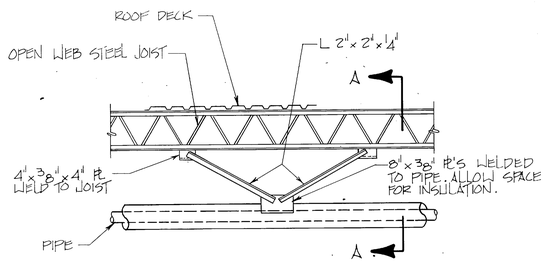

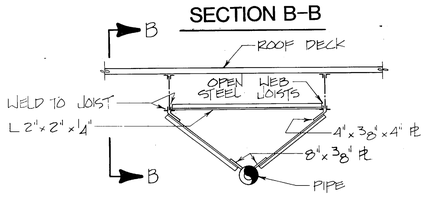

SECTION B-B

SECTION A-A

A (M-1 | M-13) ANCHOR WITH JOISTS PARALLEL TO PIPE RUN

NOTE: IF PIPING IS DIRECTLY UNDER JOISTS ONLY, TWO STRUTS TO JOIST DIRECTLY ABOVE ARE NEEDED INSTEAD OF FOUR AS SHOWN.

M-2
M-3

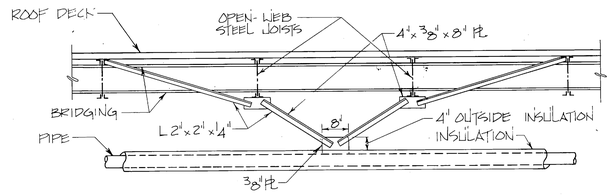

B (M-2 | M-13) ANCHOR WITH JOISTS PERPENDICULAR TO PIPE RUN

NOTE: ANCHOR SHOULD BE LOCATED NEAR BRIDGING IF POSSIBLE. WELD ALL CONNECTIONS.

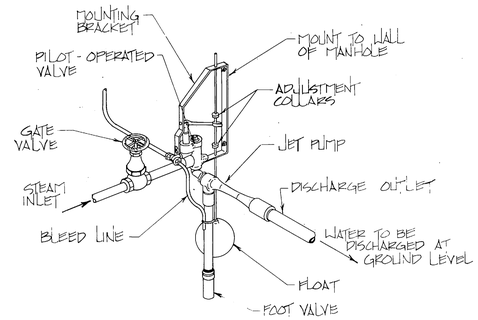

C (M-10 | M-13) SUMP EJECTOR

NTS.

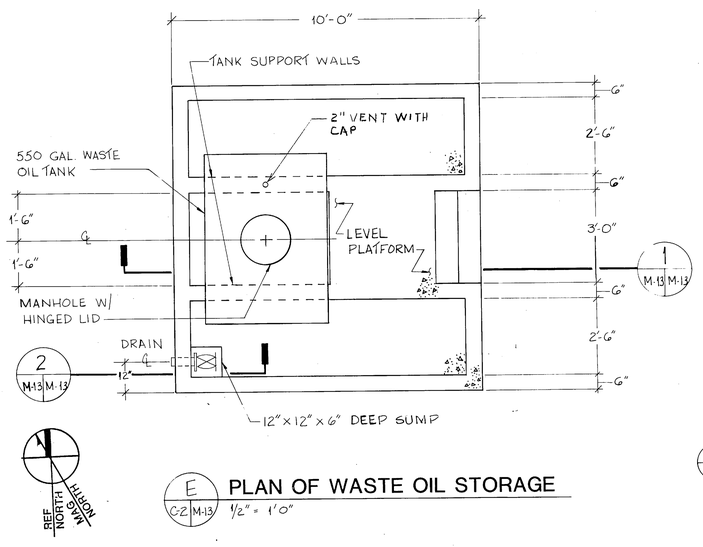

2 (M-13 | M-13)

E (C-2 | M-13) PLAN OF WASTE OIL STORAGE

1/2" = 1'0"

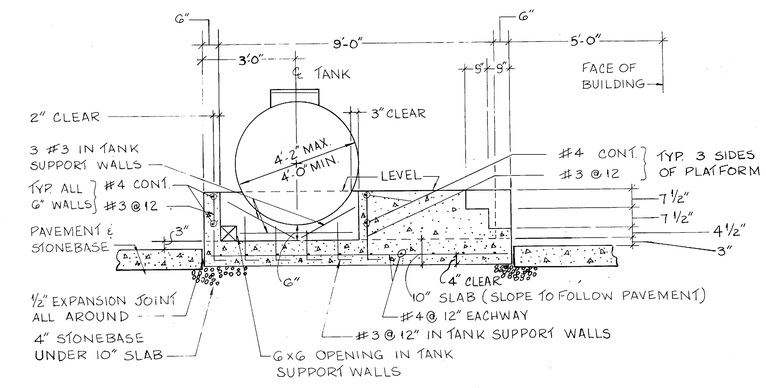

1 (M-13 | M-13) SECTION THRU WASTE OIL STORAGE

1/2" = 1'0"

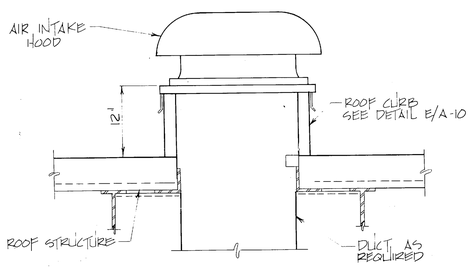

D (M-7 | M-13) AIR INTAKE HOOD

NTS.

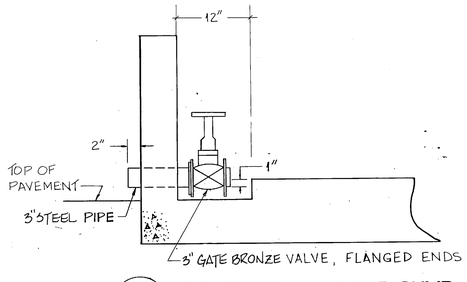

2 (M-13 | M-13) SECTION THRU DEEP SUMP

1" = 1'0"

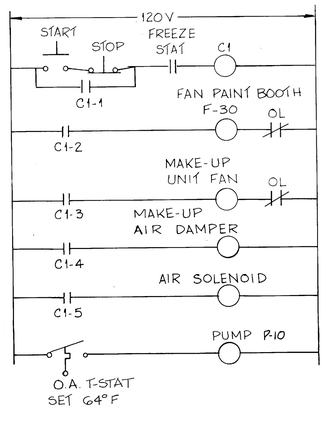

ELECTRICAL CONTROL MAKE-UP AIR UNIT

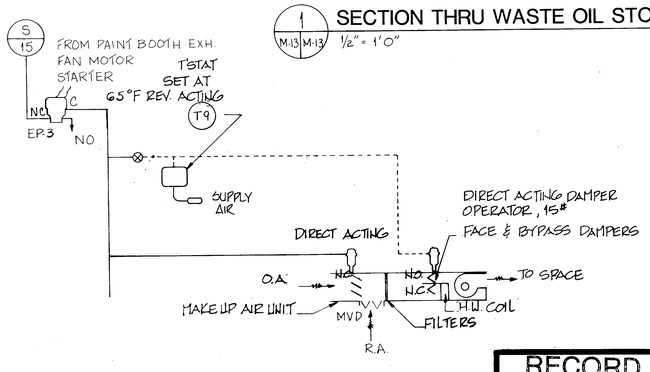

PAINT BAY MAKE-UP AIR CONTROL

FC 280

RECORD DRAWING LETTER DATED

M-13

OLSEN ASSOCIATES
RALEIGH, N. CAROLINA
ENGINEERS & ARCHITECTS

DEPARTMENT OF THE NAVY — NAVAL FACILITIES ENGINEERING COMMAND
ATLANTIC DIVISION
NAVAL STATION — NORFOLK, VIRGINIA

DES. EDB | DR. BTD | CHK. TBD
PROJ. MGR. DNL | CH. ENGR.
SUBMITTED BY | DATE 5-6-87
FIRM MEMBER | PRINCIPAL
EFD JFR | RVD JFR
HD RCB | DIR KD
APPROVED | DATE
OFFICER IN CHARGE
APPROVED | DATE
FOR EFD FOR COMMANDER NAVFAC

MARINE CORPS BASE, CAMP LEJEUNE, N.C.
FIELD MAINTENANCE COMPLEX

MISCELLANEOUS DETAILS

SIZE F | CODE IDENT. NO. | NAVFAC DRAWING NO. 4155691
CONSTR. CONTR. NO. N62470-85-B-5149
SCALE AS NOTED | SPEC. 05-85-5149 | SHEET 74 OF 93

EFD DWG. NO. 255691

REVISIONS			
SYM	DESCRIPTION	DATE	APPROVED

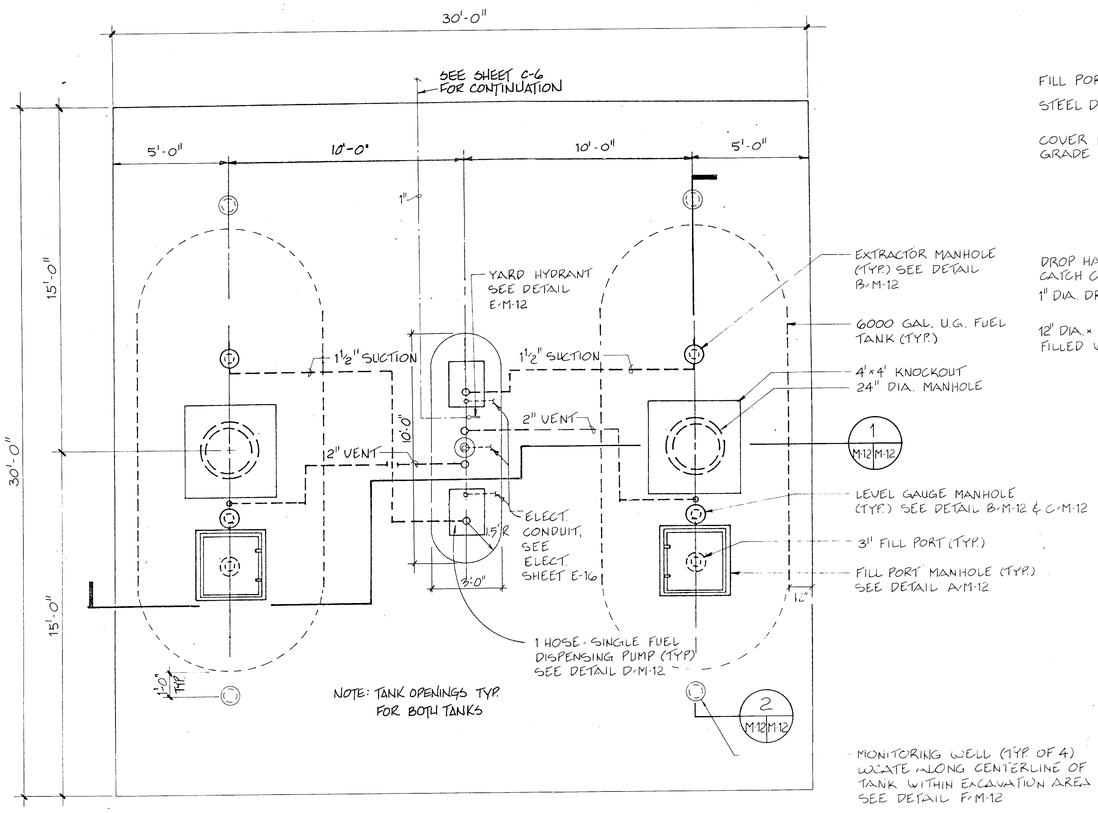

FUEL DISPENSING ISLAND PLAN

SCALE: 3/8" = 1'-0"

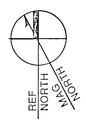

KEY PLAN

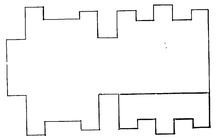

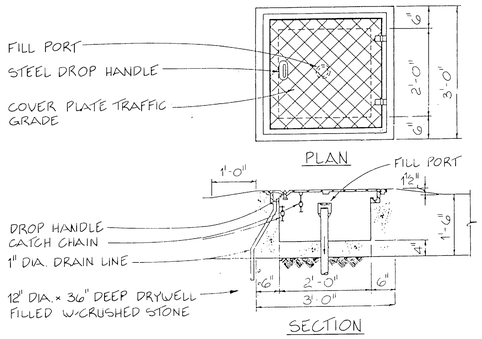

A M-12 M-12 **FILL PORT MANHOLE**

NOT TO SCALE

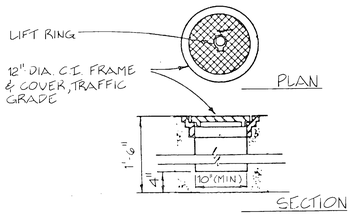

B M-12 M-12 M-9 **EXTRACTOR & LEVEL GAUGE MANHOLE S**

NOT TO SCALE

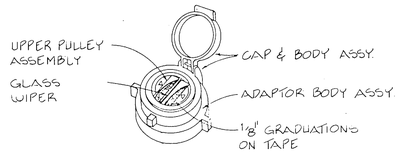

C M-12 M-12 **LEVEL GAUGE**

NOT TO SCALE

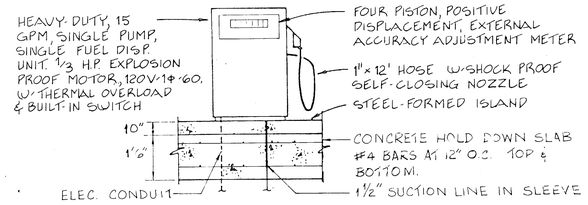

D M-12 M-12 **FUEL DISPENSING UNIT**

NOT TO SCALE

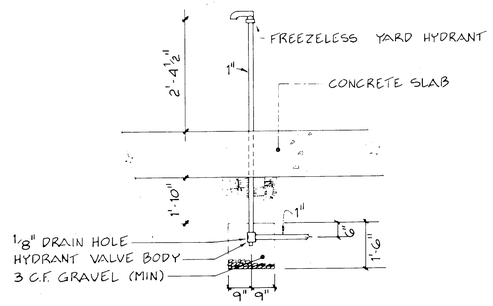

E M-12 M-12 **STANDUP YARD HYDRANT**

NOT TO SCALE

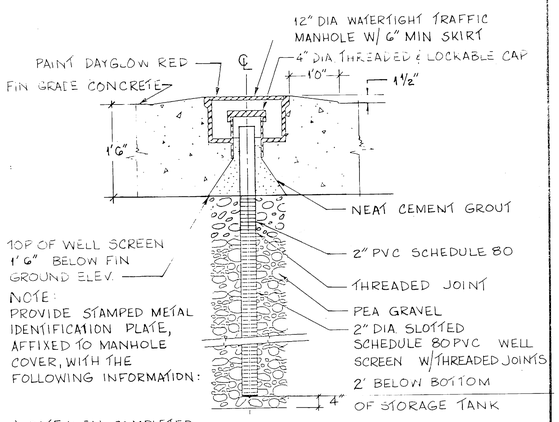

NOTE:
PROVIDE STAMPED METAL IDENTIFICATION PLATE, AFFIXED TO MANHOLE COVER, WITH THE FOLLOWING INFORMATION:

1) DATE WELL COMPLETED
2) TOTAL DEPTH OF WELL
3) DEPTH TO SCREENS
4) A NOTE SAYING "WELL IS FOR MONITORING AND IS NOT CONSIDERED SAFE FOR DRINKING."

F M-12 M-12 **MONITORING WELL**

NOT TO SCALE

NOTES:
1. SLOPE ALL VENT & FILL LINES BACK TO TANK.
2. FILL TANKS PRIOR TO BACKFILLING.
3. PROVIDE WHISTLE VENTS FOR EACH TANK & SWING JOINTS FOR ALL PIPING CONNECTIONS.
4. DEPTH OF BURY, BACKFILLING, OVERBURDEN & BEDDING MATERIAL TO COMPLY WITH TANK MFG'S INSTALLATION RECOMMENDATIONS.

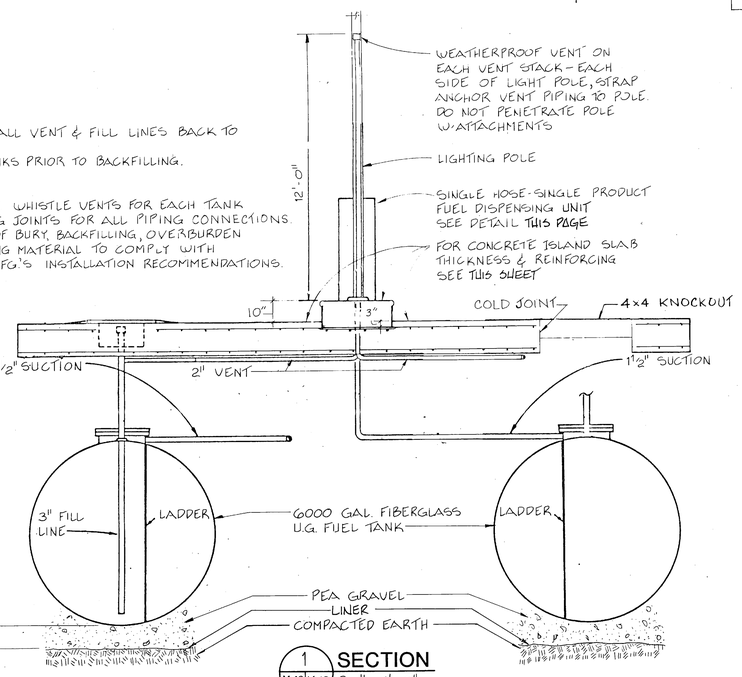

1 M-12 M-12 M-9 **SECTION**

3/8" = 1'-0"

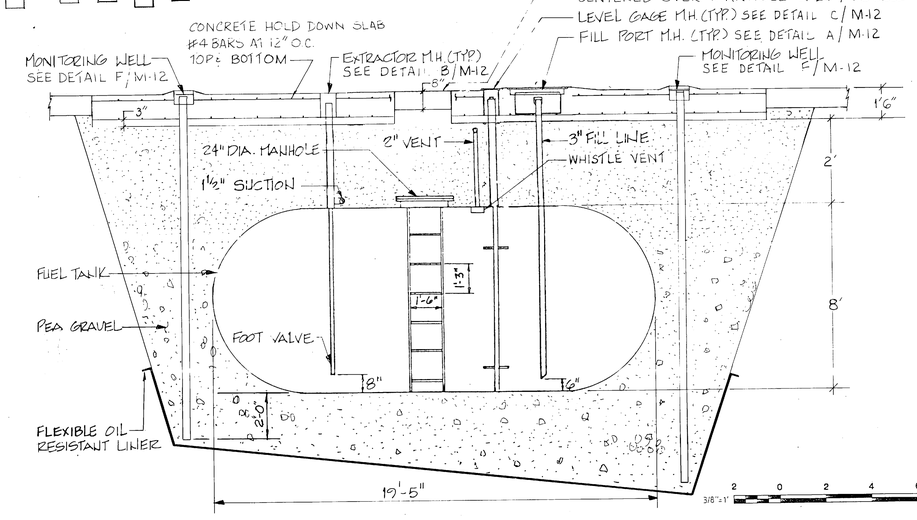

2 M-12 M-12 **SECTION**

3/8" = 1'-0"

0					
0					
0					
0	15-120	0-120			
0	0	0			
0	15-120	0-120			
T-2	T-2				

NORTH CAROLINA PROFESSIONAL SEAL 11901 ENGINEER GARRIER CONWAY

FC 280

RECORD DRAWING LETTER DATED 8/21/87

M-12

OLSEN ASSOCIATES
RALEIGH, N. CAROLINA
ENGINEERS & ARCHITECTS

DES. TBD DR. RLP CHK. TBD
PROJ. MGR. ONL CH. ENGR.
SUBMITTED BY: DATE 3-6-87
FIELD MEMBER PRINCIPAL
EFD JGR RVD JTT
HD RCB DIR KD
APPROVED DATE
OFFICER IN CHARGE
APPROVED DATE 3-11-87
FOR EFD FOR COMMANDER NAVFAC

DEPARTMENT OF THE NAVY — NAVAL FACILITIES ENGINEERING COMMAND
ATLANTIC DIVISION
NAVAL STATION — NORFOLK, VIRGINIA

MARINE CORPS BASE, CAMP LEJEUNE, N.C.
FIELD MAINTENANCE COMPLEX

FUEL ISLAND DETAILS

SIZE	CODE IDENT. NO.	NAVFAC DRAWING NO.
F		4155690
		CONSTR. CONTR. NO. N62470-85-B-5149
SCALE AS NOTED	SPEC. 05-85-5149	SHEET 73 OF 93

EFD DWG. NO. 255690

FC280

REVISIONS			
SYM	DESCRIPTION	DATE	APPROVED

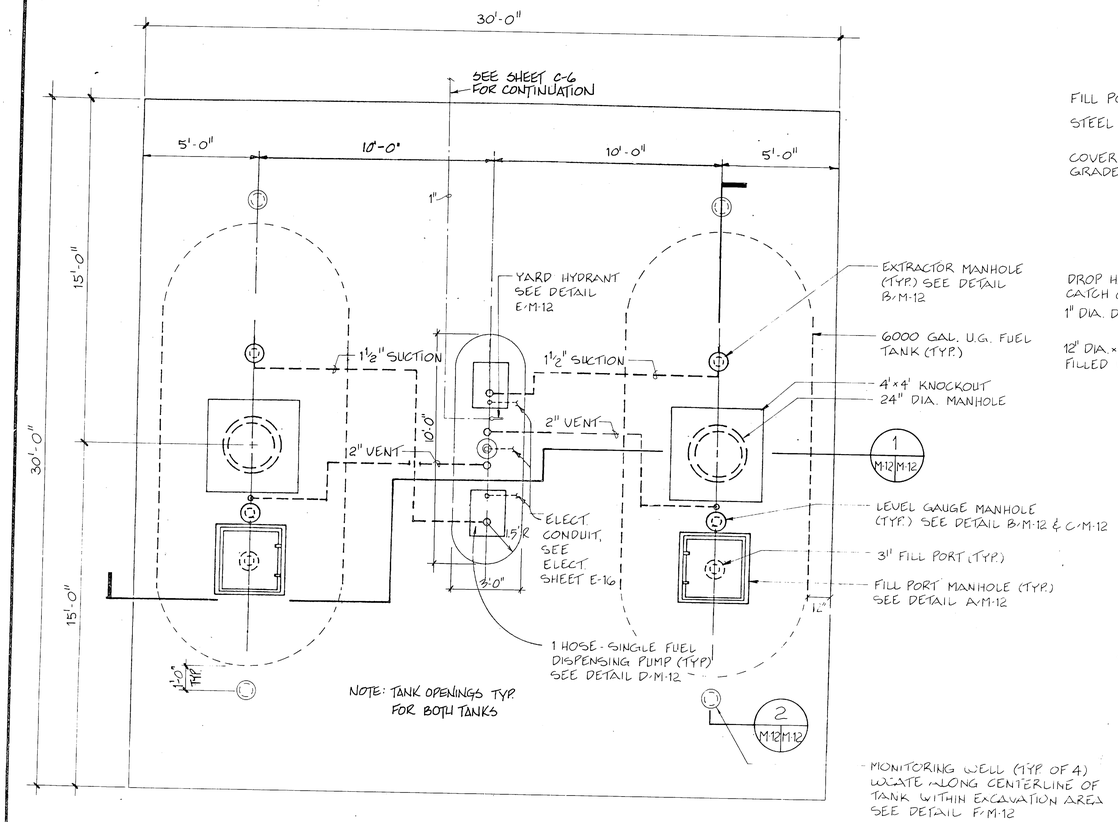

FUEL DISPENSING ISLAND PLAN

SCALE: 3/8" = 1'-0"

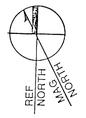

KEY PLAN

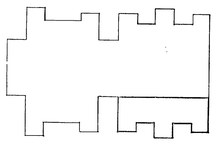

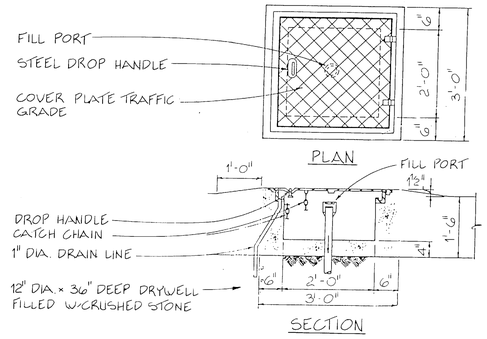

A M-12 M-12 **FILL PORT MANHOLE**
NOT TO SCALE

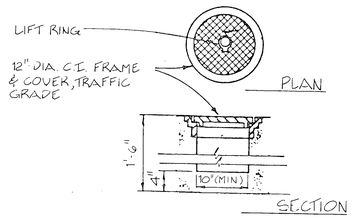

B M-12 M-12 **EXTRACTOR & LEVEL GAUGE MANHOLES**
NOT TO SCALE
M-9

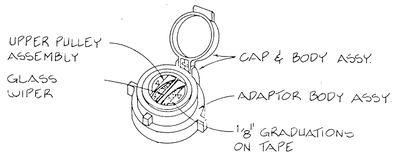

C M-12 M-12 **LEVEL GAUGE**
NOT TO SCALE

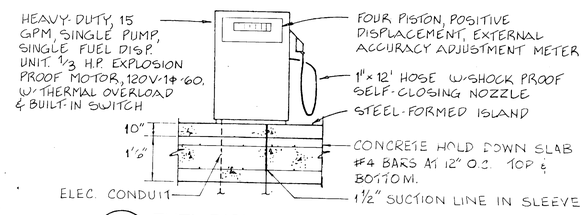

D M-12 M-12 **FUEL DISPENSING UNIT**
NOT TO SCALE

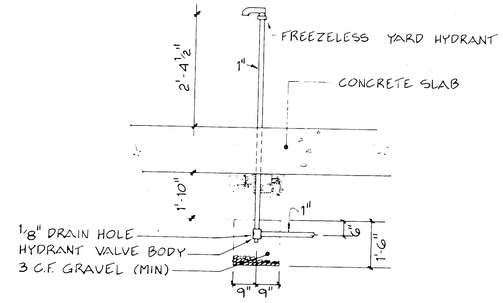

E M-12 M-12 **STANDUP YARD HYDRANT**
NOT TO SCALE

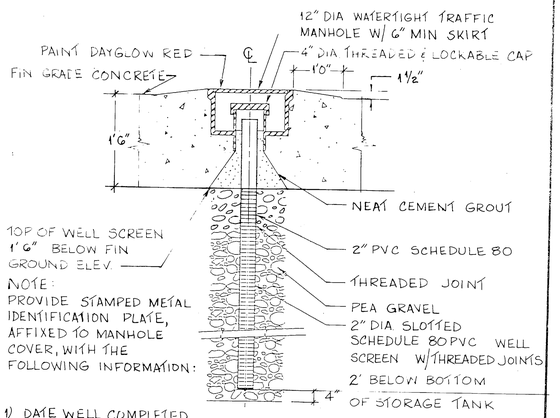

NOTE:
PROVIDE STAMPED METAL IDENTIFICATION PLATE, AFFIXED TO MANHOLE COVER, WITH THE FOLLOWING INFORMATION:

1) DATE WELL COMPLETED
2) TOTAL DEPTH OF WELL
3) DEPTH TO SCREENS
4) A NOTE SAYING "WELL IS FOR MONITORING AND IS NOT CONSIDERED SAFE FOR DRINKING."

F M-12 M-12 **MONITORING WELL**
NOT TO SCALE

NOTES:
1. SLOPE ALL VENT & FILL LINES BACK TO TANK.
2. FILL TANKS PRIOR TO BACKFILLING.
3. PROVIDE WHISTLE VENTS FOR EACH TANK & SWING JOINTS FOR ALL PIPING CONNECTIONS.
4. DEPTH OF BURY, BACKFILLING, OVERBURDEN & BEDDING MATERIAL TO COMPLY WITH TANK MFG'S INSTALLATION RECOMMENDATIONS.

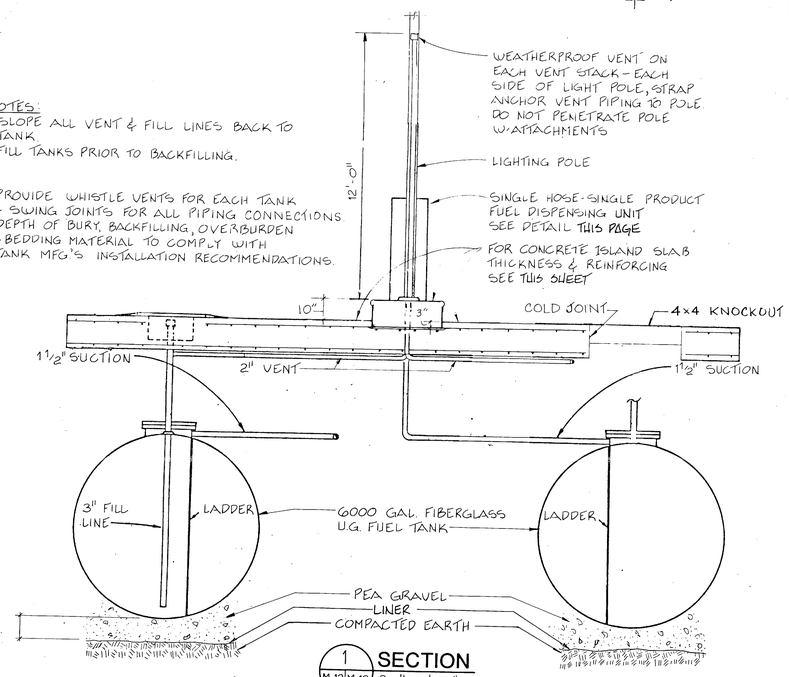

1 M-12 M-12 **SECTION**
M-9 3/8" = 1'-0"

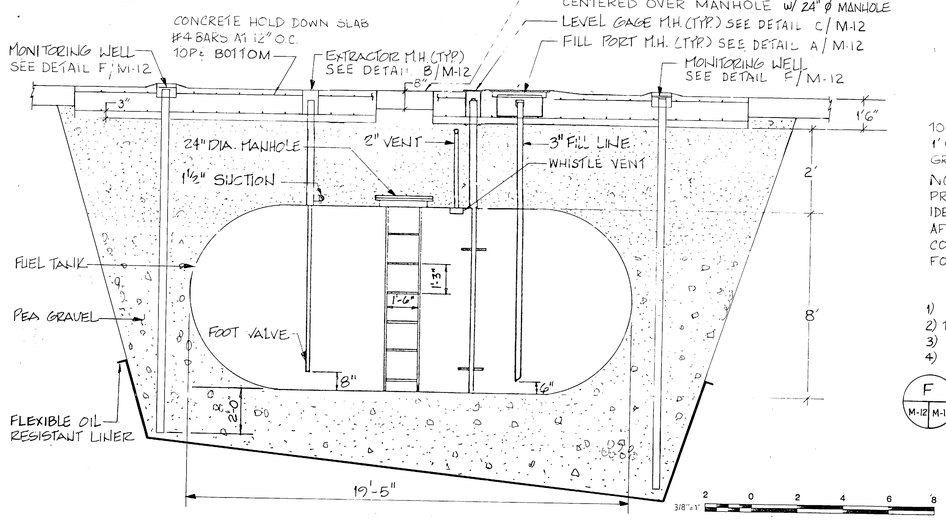

2 M-12 M-12 **SECTION**
3/8" = 1'-0"

0			
0			
0			
0	0	15/12	0-12
0	0	15/12	0-12
T.B.			

FC 280

RECORD DRAWING LETTER DATED 8CH

M-12

OLSEN ASSOCIATES
RALEIGH, N. CAROLINA
ENGINEERS & ARCHITECTS

DEPARTMENT OF THE NAVY — NAVAL FACILITIES ENGINEERING COMMAND
NAVAL STATION — **ATLANTIC DIVISION** — NORFOLK, VIRGINIA

MARINE CORPS BASE, CAMP LEJEUNE, N.C.
FIELD MAINTENANCE COMPLEX

FUEL ISLAND DETAILS

DES. TBD DR. RLP CHK. TBD
PROJ. MGR. DNL CH. ENGR.
SUBMITTED BY FIRM MEMBER DATE 3-6-87 PRINCIPAL
EFD JFR RVD JTF
MD. RLB DIR KO
APPROVED DATE
OFFICER IN CHARGE
APPROVED DATE 3-11-87
FOR EFD FOR COMMANDER NAVFAC

SIZE F | CODE IDENT. NO. | NAVFAC DRAWING NO. 4155690
CONSTR. CONTR. NO. N62470-85-B-5149
SCALE AS NOTED | SPEC. 05-85-5149 | SHEET 73 OF 93

NORTH CAROLINA REGISTERED ARCHITECT SEAL 13901 DANIEL L. OLSEN HEREBY CERTIFY THAT THIS DRAWING IS A TRUE COPY OF THE ORIGINAL DRAWING

EFD DWG. NO. 255690