Check Sheet Route To Engineering Dept. or Requisitioner

INDIVIDUAL ITEMS LISTED BELOW

PISCHER & PORTER COMPANY
WARMINSTER, PENNSYLVANIA, U. S. A.

VG

SPEC. BY: G. Hoehn
Sys. Eng. L. [illegible]

CUST NO.	COUNTY	STATE	IND.	DATE ENTERED		SHIP WEEK OF
201404	119	32	934	1 Apr. 64	675100	

SALES ORDER NUMBER: 6403 A 2916 J

CUSTOMER ORDER NUMBER: 15-11

REQUISITION/JOB NUMBER:

DATE RECEIVED:

REFERENCE NUMBERS: Government Inspect. Required

SHIP TO: PANEL DEPT 43 P

MARK:

F.O.B. SHIPPING POINT:

CR.	DISTRICT	AREA	CR.	DISTRICT	AREA
2	Chtt	64	2	Rich	32

SOLD TO:
Brown Construction Co.
P.O. Box 25644
Charlotte 6, N.C.

DIST.	MAN.	PROD.	AMOUNT	PROD.	AMOUNT	PROD.	AMOUNT

CUSTOMER ORDER NUMBER:

REQUESTED ROUTING:

B/L	SHIPPED VIA	DATE SHIPPED	DATE INVOICED	INVOICE NO.

TAG & MARK: 22.3.2 RECEIVER & PUMP CONTROL - RESERVOIR WATER LEVEL

SCHED. SHIPMENT WEEK OF: TO PANEL DEPT 7 SEPT 64

SERIAL NO.: 6403A2916 J5

ITEM	QUAN.	COMPLETE INSTRUMENT MODEL NUMBER	UNIT PRICE	AMOUNT
	1	1102MF04 WITH 10" INDICATOR STRIP		

PRESSURE ELEMENT

RANGE	TYPE	MAT'L.	SPEC. NO.	O'RANGE

B/M	LOC. ON PLATE	SPINDLE NO.	TRAVEL DEGREES	OUTPUT LEVER R.N.

PROTECTOR TYPE: ☐ PURCH. REQ. ☐ STOCK BY- CODE

DIAPHRAGM MAT'L.: ☐ CASE MTD. ☐ REMOTE MTD.

BOTTOM BOWL MATL.	CONN. TYPE	ARMOR LENGTH	MAT'L.

B/M	CAPIL. LGTH.	MAT'L.	SPEC. NO.

INSTRUMENT SPECS.

SCALE & UNITS	PEN COLOR	ELEM. LOC.	SPTN NO.	SIG'L	X'MIT	IND.	REC	TOT	CONT	RATIO W	RATIO C
0-15 FEET LEVEL	RED	MF1	2	LIN		X	X	ALARMS (3)			

ACCESSORIES PER INST.
☐ GAUGES (PSI OR KG/CM²)
☐ HI-TEMP. TRANSMITTER
☐ ASB, GSK, ALUM. PAINT HEAT SHIELD
☐ FILT. REG #
QUAN. CHARTS 400

INTEGRATOR: 52T COUNT X = CPH; 52T COUNT X = CPH

CHART & DRIVE: ☒ ELEC. ☐ EXP. PROOF ☐ PNEU. ☐ SPRING
SPEED 24 Hr./Rev.
RANGE 0-15 24H
P/N 211G008

CONTROLLER: 53P 53P
PROCESS INCREASE, OUTPUT: ☐ INCREASE ☐ ☑ DECREASE ☑

TYPE OF MOUNTING: ☐ WALL ☒ PANEL ☐ U-BOLT
PEDESTAL: ☐ W/PIPE STAND ☐ W/O PIPE STAND

B/M: 51-1100, 51-1118

WIRE DIAG: WD-51-1220, 21 & 27 WD-55-1002
VOLTS: 115 - 60 CY.

SERIES:

PRODUCT: V-39900 2

A.) FURNISH WITH MODEL 55GL1353 "IN-CASE"
TIME PULSE CONTROL UNIT LOCATION W1

B.) FURNISH WITH MODEL 54MF1521A TIME PULSE
RECEIVER - TIME CYCLE 15 SECONDS
FUNCTION LINEAR / LINEAR

SUB-TOTAL $
TRANSPORT. CHARGE

OTHER S.N.	DIM. DWG.	QTY. INSTR.	SPEC. DATE	AMT. OF INVOICE
9	WD-55-1019 OD-51-1064	5/5 BULL. W/ SHIP'MT. 51-1100 54MF1000 50GL1350 55AC1000	14 JULY	$

SHIPMENT: ☐ COMPLETE ☐ PARTIAL ☐ FINAL PARTIAL

TERMS: NET 30 DAYS

Form 79-9C
FORM 79-77E

SHEET # 1 of 4

Check Sheet Route To Engineering Dept. or Requisitioner

INDIVIDUAL ITEMS LISTED BELOW

WARMINSTER, PENNSYLVANIA, U. S. A.

VG

CUST NO.	COUNTY	STATE	IND.	DATE ENTERED		SHIP WEEK OF
201404	119	32	934	1 Apr.64	675100	

CUSTOMER ORDER NUMBER: 15-11

REQUISITION/JOB NUMBER:

DATE RECEIVED:

SHIP TO: PANEL DEPT 43 P

MARK:

F.O.B. SHIPPING POINT:

SPEC. BY: G. Hoehn Sys. Eng. L.

SALES ORDER NUMBER: 6403 A 2916 J

REFERENCE NUMBERS: Government Inspect. Required

CR.	DISTRICT	AREA	CR.	DISTRICT	AREA
2	Chtt	64	2	Rich	32

SOLD TO:
Brown Construction Co.
P.O. Box 25644
Charlotte 6, N.C.

DIST.	MAN.	PROD.	AMOUNT	PROD.	AMOUNT	PROD.	AMOUNT

CUSTOMER ORDER NUMBER:

REQUESTED ROUTING:

CALIB.	TAG & MARK	SCHED. SHIPMENT WK. OF	DATE SHIPPED	SERIAL NO.
ITEM	SHEET # 2 of 4		SHIPPED VIA	B/L

QUANTITY	SIZE	MODEL NUMBER
		1102MF04

DATE INVOICED | INVOICE NO.

MANUFACTURING SPECIFICATIONS

C.) FURNISH THREE (3)
MODEL 55AC1000 MICROSWITCH ALARMS
LOCATION A1 CONTACT RATING 2 AMPS @ 117VAC
SET: ONE (1) ALARM @ LEVEL 14.0 FEET
TO CLOSE ON (RISING PEN MOTION)
INCREASING LEVEL TO STOP PUMP #1
SET: ONE (1) ALARM @ LEVEL 12.0 FEET
TO CLOSE ON (FALLING PEN MOTION)
DECREASING LEVEL TO START PUMP #1
SET: ONE (1) ALARM @ LEVEL 2.0 FEET
TO OPEN ON (FALLING PEN MOTION)
DECREASING LEVEL TO "SHUT-OFF"
PUMPS #1, 2 AND 3 ON DATA SHEET
6403A2916J3

PR CD.	UNIT PRICE	AMOUNT

PRODUCT V-
PRODUCT V-

SUB-TOTAL TRANSPORT. CHARGE

AMOUNT OF INVOICE $

OTHER SN	DIM. DWG.	QTY	INSTR. BULL W/ SHIP'T.
		5/5	

SPEC. DATE

SHIPMENT: ☐ COMPLETE ☐ PARTIAL ☐ FINAL PARTIAL

TERMS: NET 30 DAYS

FORM 79-79D
Form 79-9C

SHEET # 2 of 4

Check Sheet Route To Engineering Dept. or Requisitioner

INDIVIDUAL ITEMS LISTED BELOW

FISCHER & PORTER COMPANY
WARMINSTER, PENNSYLVANIA, U. S. A.

VG

SPEC. BY: G. Hoehn
Sys. Eng. L. [illegible]

CUST NO.	COUNTY	STATE	IND.	DATE ENTERED		SHIP WEEK OF
201404	119	32	934	1 Apr. 64	675100	

CUSTOMER ORDER NUMBER: 15-11
REQUISITION/JOB NUMBER:
DATE RECEIVED:

SALES ORDER NUMBER: 6403 A 2916 J

REFERENCE NUMBERS: Government Inspect. Required

CR.	DISTRICT	AREA	CR.	DISTRICT	AREA
2	Chtt	64	2	Rich	32

SHIP TO: PANEL DEPT 43 P

MARK:

F.O.B. SHIPPING POINT:

SOLD TO:
Brown Construction Co.
P.O. Box 25644
Charlotte 6, N.C.

DIST.	MAN.	PROD.	AMOUNT	PROD.	AMOUNT	PROD.	AMOUNT

CUSTOMER ORDER NUMBER:
REQUESTED ROUTING:

CALIB.	TAG & MARK	SCHED. SHIPMENT WK. OF	DATE SHIPPED	SERIAL NO.
ITEM	SHEET # 3 of 4		SHIPPED VIA	6403A2916J5
				B/L

QUANTITY	SIZE	MODEL NUMBER
1		1102 MF04

DATE INVOICED	INVOICE NO.

PR CD.	UNIT PRICE	AMOUNT

MANUFACTURING SPECIFICATIONS

REFERENCE

PANEL DESIGN DEPT. TO PROVIDE PROVISIONS FOR AN ALTERNATOR TO AUTOMATICALLY ALTERNATE THE STARTING CYCLES OF PUMPS #1 & 2. INSTRUMENT TO BE INTERCONNECTED WITH AUTOMATIC FILTER CONTROL VALVE AND DETENTION TANK TELEMETERING FACILITY SO AS TO CAUSE FILTER PUMPS TO BE SHUT-OFF DURING PERIODS OF FILTER BACKWASH AND OF LOW WATER IN DETENTION TANK

PRODUCT V-
PRODUCT V-

D) FOR USE WITH:

B.I.F. CHRONOFLO TRANSMITTER _ 15 SECOND CYCLE

SERIAL NO 6403A2916J4

SUB-TOTAL TRANSPORT. CHARGE

AMOUNT OF INVOICE $

OTHER SN	DIM. DWG.	QTY	INSTR. BULL W/ SHIP'T.
		5/5	

SPEC. DATE

SHIPMENT: ☐ COMPLETE ☐ PARTIAL ☐ FINAL PARTIAL

TERMS: NET 30 DAYS

FORM 79-79D
Form 79-9C

Check Sheet Route To Engineering Dept. or Requisitioner

WARMINSTER, PENNSYLVANIA, U. S. A.

SPEC BY G. Roehn

Eng. Dept. Engineer

SALES ORDER NUMBER 6403 A 2916 J

INDIVIDUAL ITEMS LISTED BELOW

CUSTOMER ORDER NUMBER 15-11

REQUISITION/JOB NUMBER

DATE RECEIVED

REFERENCE NUMBERS Government Inspect. Required

CO.	INDUSTRY	AREA	CO.	DISTRICT	AREA
2	Chtt	64	2	Rich	32

SHIP TO PANEL DEPT 43 D

NAME

F.O.B. SHIPPING POINT

SOLD TO
Brown Construction Co.
P.O. Box 25644
Charlotte 6, N.C.

DIST.	MAN.	PROD.	AMOUNT	PROD.	AMOUNT	PROD.	AMOUNT

CUSTOMER ORDER NUMBER

REQUESTED ROUTING

CALIB.	TAG & MARK	SCHED. SHIPMENT WK. OF	DATE SHIPPED	SERIAL NO.
ITEM	SHEET # 4 of 4		SHIPPED VIA	B/L

QUANTITY	SIZE	MODEL NUMBER	DATE INVOICED	INVOICE NO.
1		1102 MF04		

MANUFACTURING SPECIFICATIONS

SCHEDULE OF FILTER PUMPS OPERATION FOR AUTOMATIC PROGRAM CONTROL

RISING LEVEL			WATER LEVEL	FALLING LEVEL		
STOP PUMP	PUMP RUNNING				PUMP RUNNING	START PUMP
ALL PUMPS OFF					ALL PUMPS OFF	
1			14.0			
	1					
			12.0			1
					1	
			2.0		PUMPS #1,2 & 3 ON 13	OFF

PR CD.	UNIT PRICE	AMOUNT

ROUTE ABOVE INSTRUMENT TO PANEL DEPT 43P BY 7 SEPT 64 MOUNT ON CONTROL PANEL SPECIFIED ON SERIAL No. 6403A2916J1

PANEL SHIPMENT SCHEDULED 5 Oct 64

PRODUCT V-

PRODUCT V-

SUB-TOTAL

TRANSPORT. CHARGE

AMOUNT OF INVOICE $

OTHER SN	DIM. DWG.	QTY	INSTR.
		5/5	BULL W/ SHIP'T.

SPEC. DATE

SHIPMENT: ☐ COMPLETE ☐ PARTIAL ☐ FINAL PARTIAL

TERMS: NET 30 DAYS

FORM 79-79D

Form 79-9C

INSTRUMENT CASE DIMENSIONS

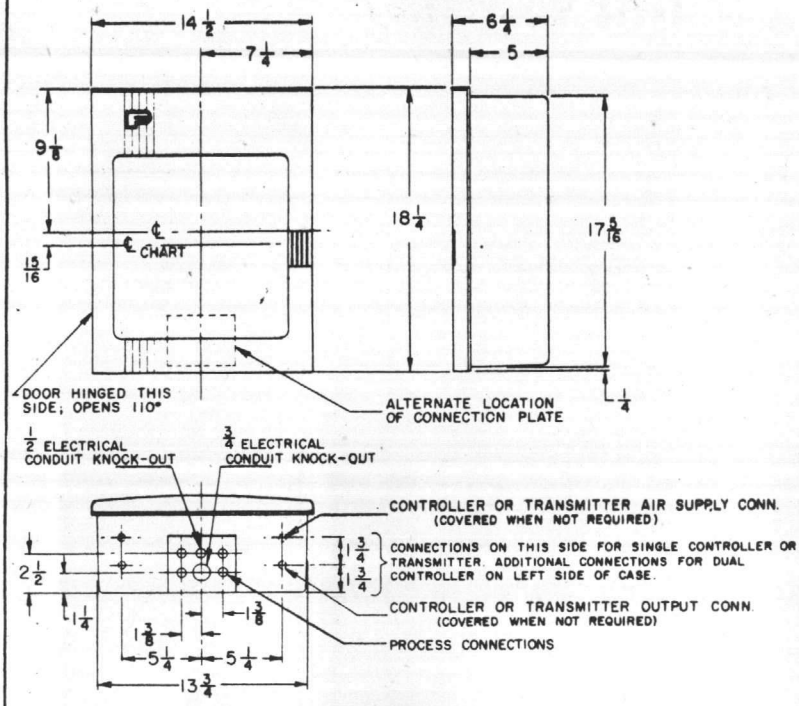

Certified Correct
For: Brown Construction Company
Order No. 15-11
F&P Serial No. 6403 A 2916 J5
Tag: 22.3.2 Receiver and Pump Control-Reservoir Water Level
Date: 14 August 1964
By: [signature]

OD-51-1064

GENERAL NOTES

1. ALL DIMENSIONS IN INCHES UNLESS OTHERWISE SPECIFIED.
2. DIMENSIONS GUARANTEED ONLY IF THIS PRINT IS CERTIFIED.
3. UNLESS OTHERWISE SPECIFIED CONNECTIONS WILL BE MADE THRU THE BOTTOM PLATE. THE PLATE IS EASILY CHANGED IN THE FIELD FROM THE BOTTOM POSITION TO THE BACK, OR ROTATED 180° FOR OTHER CONDUIT SIZE.
4. ALL PRESSURE PROCESS AND AIR CONNECTIONS ARE 1/4" N.P.T.I
5. PROCESS CONNECTIONS ARE COLOR CODED TO MATCH PEN COLORS.

2" PIPE YOKE MOUNTING

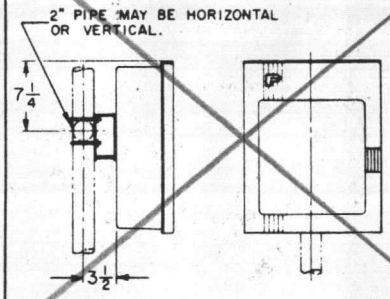

PANEL MOUNTING

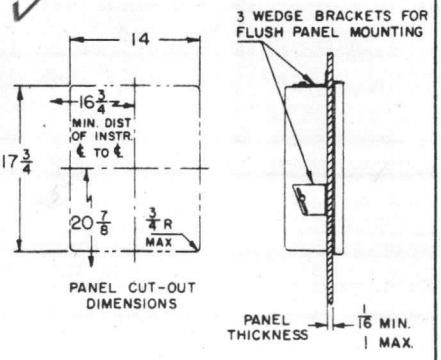

WALL MOUNTING

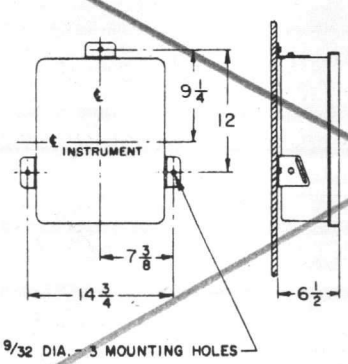

PIPE STAND MOUNTING

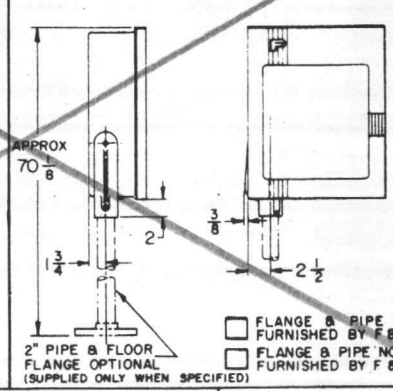

☐ FLANGE & PIPE FURNISHED BY F & P.
☐ FLANGE & PIPE NOT FURNISHED BY F & P.

REV.	W.O. No., S.H. No., D.F. No.	S.H. No.	FIG. No.	SCALE	REF. DWG. No. (s)	MADE BY	CHECKED	APPV'D
4								
3								
2	DN-2001-12	REMOVED CERTIFICATION BLOCK, REVISED TRADEMARKS.						
1	60-5456	REMOVED PROCESS CONN. NUMBERS						
0		DESCRIPTION						

OUTLINE DIMENSIONS
SINGLE DEPTH
INSTRUMENT CASE
SERIES 1100

FISCHER & PORTER CO.
WARMINSTER, PA., U.S.A.

OD-51-1064 REV. 2

PRINTS TO 34 38 F133 41 AL

CONTRACTED CITIZENS

NOW: BROWN CONSTRUCTION COMPANY

Contract No. 1-11

MS Series 3.55: Reservoir and Pump Control-

Level Measurement Water Level

Pres: Yuma Irrig. Dist. 1

EA: [illegible]

For: Brown Construction Company
Order No. 15-11
F&P Serial No. 6403 A 2916 J5
Tag: 22.3.2 Receiver and Pump Control-
Reservoir Water Level

WD-51-1220 BASIC INSTRUMENT WITH ADDITIONAL WIRING FOR OPTIONAL LIGHTS

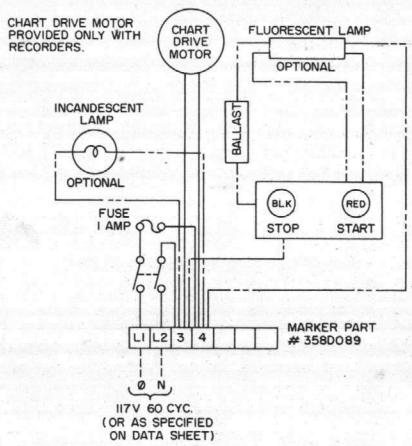

WD-51-1221 ADDITIONAL WIRING; ONE SERIES 50MF1000 TIME PULSE RECEIVER

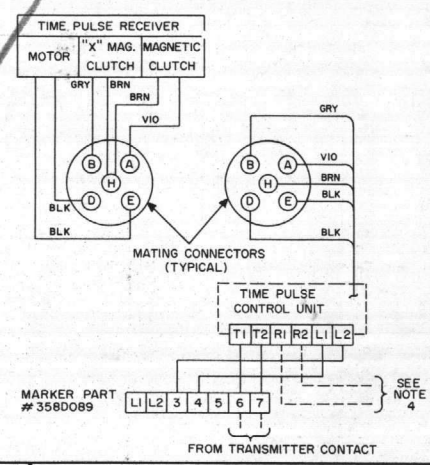

WD-51-1222 ADDITIONAL WIRING; TWO SERIES 50MF1000 TIME PULSE RECEIVERS

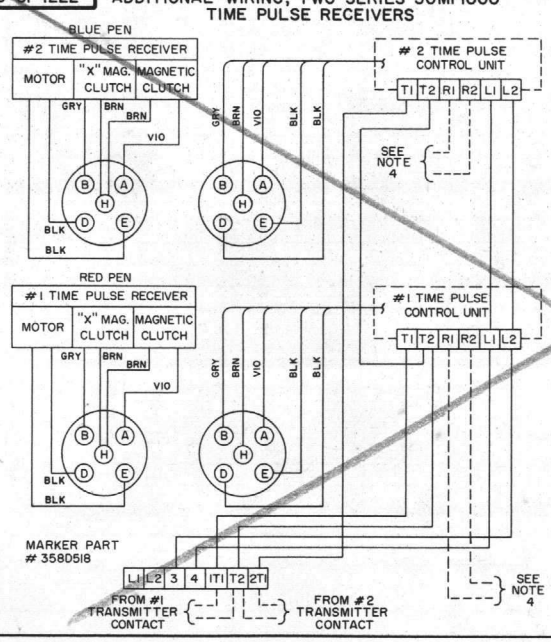

WD-51-1223 ADDITIONAL WIRING; ONE SERIES 52T-4000 INTEGRATOR & ONE SERIES 54MF1000 TIME PULSE RECEIVER

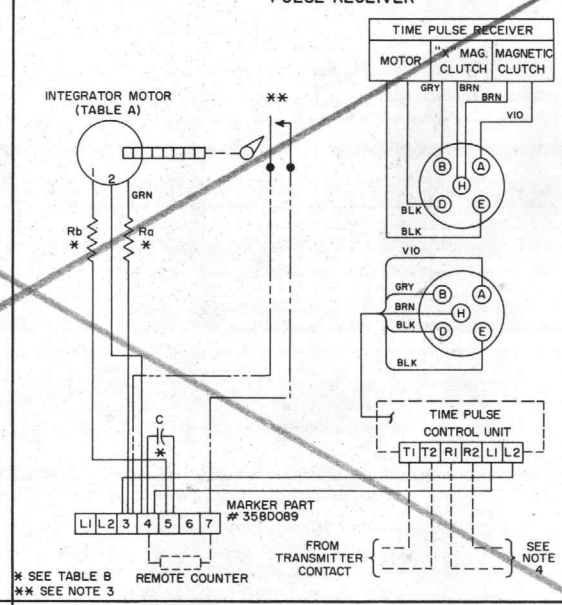

NOTES:
1. (----) DENOTES CUSTOMER WIRING.
2. (-----) PHANTOM WIRING DENOTES WIRING FOR OPTIONAL ACCESSORIES.
3. INTEGRATOR CONTACT SUPPLIED ONLY WHEN REMOTE COUNTER IS SPECIFIED.
4. TERMINALS R1 AND R2 ARE USED FOR RETRANSMISSION OF TIME PULSE SIGNAL. CONTROL UNIT CONTACTS RATING 1 AMP AT 117VAC OR 28VDC NONINDUCTIVE. CONTACTS DUPLICATE TIME PULSE TRANSMITTER CONTACTS.

TABLE A

INTEGRATOR MOTOR COLOR CODE		
LOCATION	WIRE # 1	WIRE # 2
LEFT HAND	RED	BLACK
RIGHT HAND	BLACK	RED

SEE REVERSE SIDE FOR DRAWINGS WD-51-1224 THRU WD-51-1228

TABLE B

POWER SUPPLY		RESISTOR VALUE Ra-20W	RESISTOR VALUE Rb-5W	250V AC CAPACITOR VALUE, MFD
117V	25∿	—	—	2.5
117V	50∿	—	1750	0.45
117V	60∿	—	—	0.45
230V	50∿	3500	1750	0.45
230V	60∿	3000	—	0.45

REV.	W.O. NO., RN. NO., D.R. NO.	B.M. NO.	FIG. NO.	SCALE #	REF. DWG. NO. (S) WD-51-1220-1229 REV. 1	MADE BY	CHECK BY / APP'D ENG. DEPT.
2	60-18471	REDRAWN, CHANGED HEADINGS & NOTES; SEE REV. 1 IN VOID FILE				9 AUG. 63 SMITHGALL	

WIRING DIAGRAM
STD. RECORDER OR INDICATOR
FOR TIME PULSE RECEIVER WITH
"IN CASE" CONTROL UNIT
PLUS
INTEGRATORS AND ALARMS

FISCHER & PORTER CO.
WARMINSTER, PA., U.S.A.

DRAWING NUMBER: WD-51-1220-1229 REV. 2

PRINTS TO 20 34 38 PL

WD-51-1224 ADDITIONAL WIRING; ONE SERIES 52T-4000 INTEGRATOR & TWO SERIES 54MF1000 TIME PULSE RECEIVERS

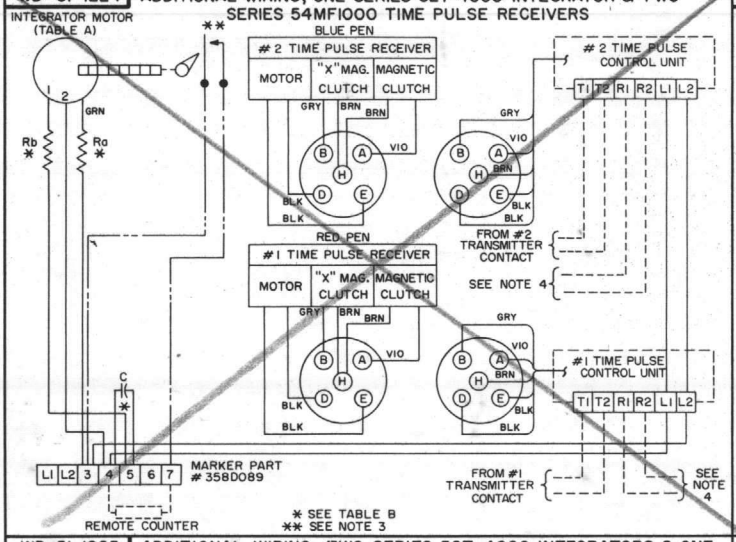

WD-51-1227 ADDITIONAL WIRING; SINGLE, DUAL OR TRIPLE SERIES 55AC1000 MICRO SWITCH ACTUATORS

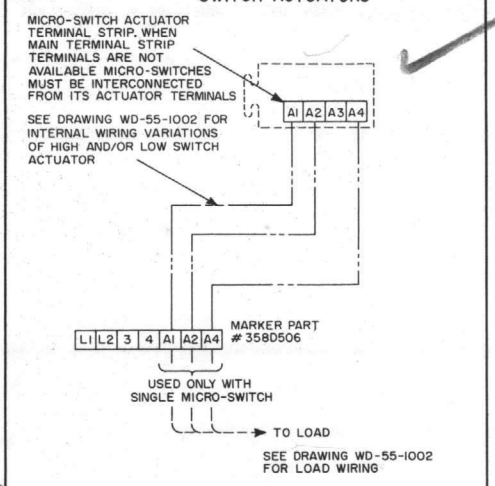

WD-51-1225 ADDITIONAL WIRING; TWO SERIES 52T-4000 INTEGRATORS & ONE SERIES 54MF1000 TIME PULSE RECEIVER

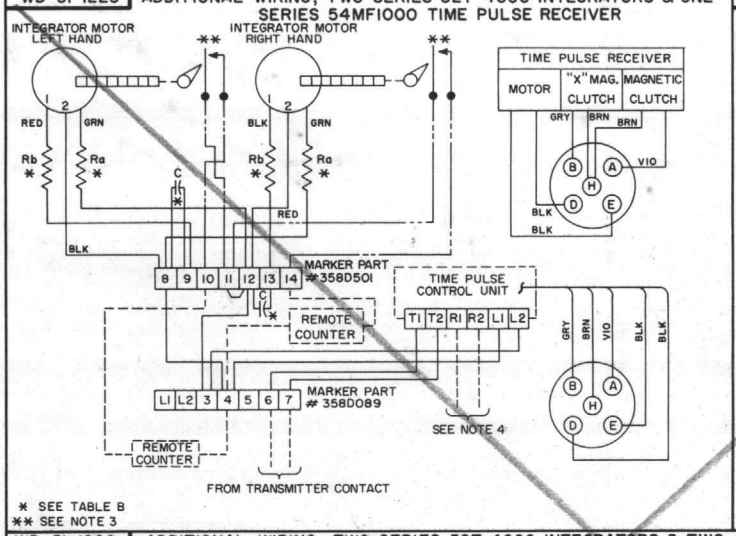

WD-51-1228 ADDITIONAL WIRING; SINGLE & DUAL SERIES 55AD2000 INDUCTALARM

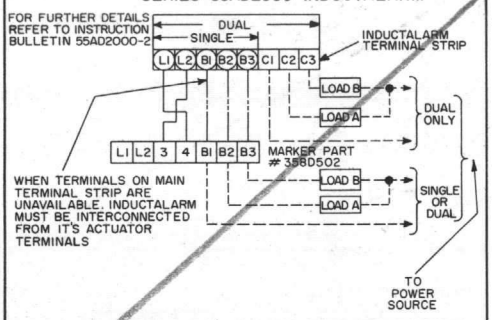

FOR ACCEPTABLE ZONE TYPE INDUCTALARM			
	BELOW ZONE	WITHIN ZONE	ABOVE ZONE
LOAD A	ENERGIZED	DE-ENERGIZED	ENERGIZED
LOAD B	DE-ENERGIZED	ENERGIZED	DE-ENERGIZED
FOR DIFFERENTIAL TYPE INDUCTALARM			
	BELOW SET-POINT	ABOVE SET-POINT	
LOAD A	DE-ENERGIZED	ENERGIZED	
LOAD B	ENERGIZED	DE-ENERGIZED	

WD-51-1226 ADDITIONAL WIRING; TWO SERIES 52T-4000 INTEGRATORS & TWO SERIES 54MF1000 TIME PULSE RECEIVERS

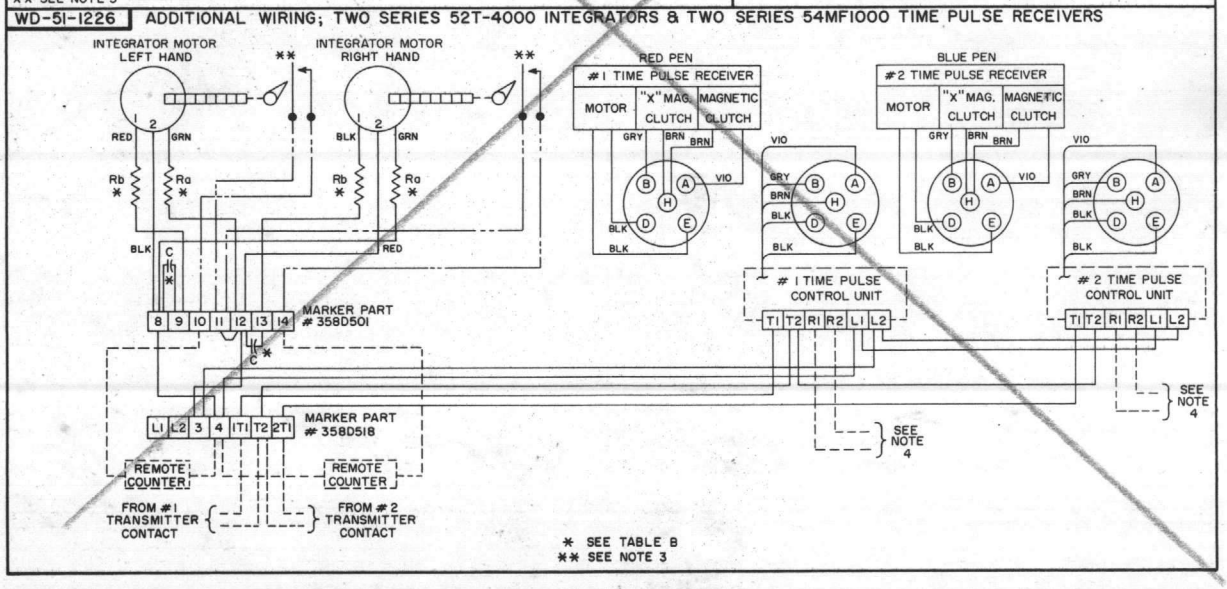

TRIPLE MICRO-SWITCHES

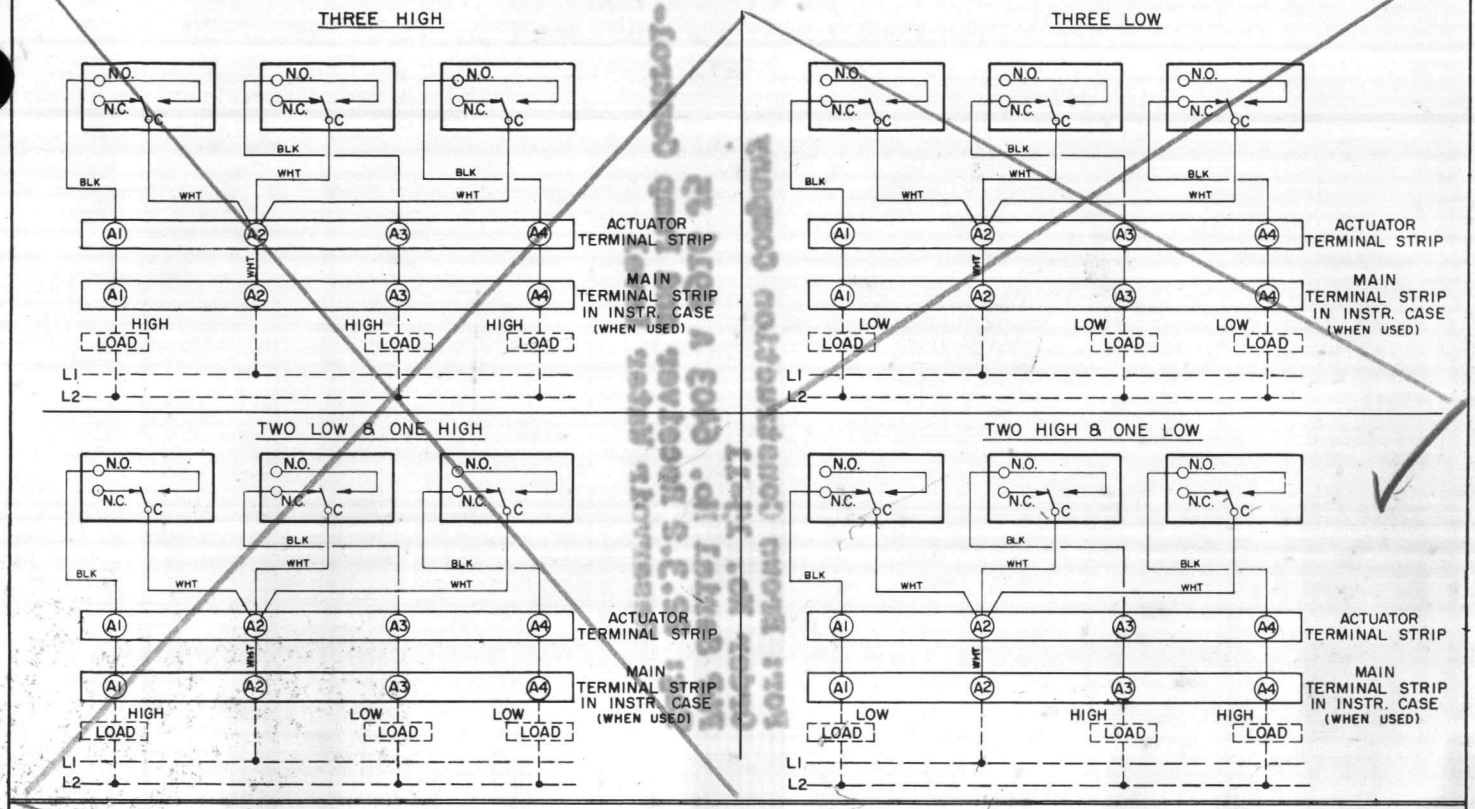

DUAL MICRO-SWITCHES

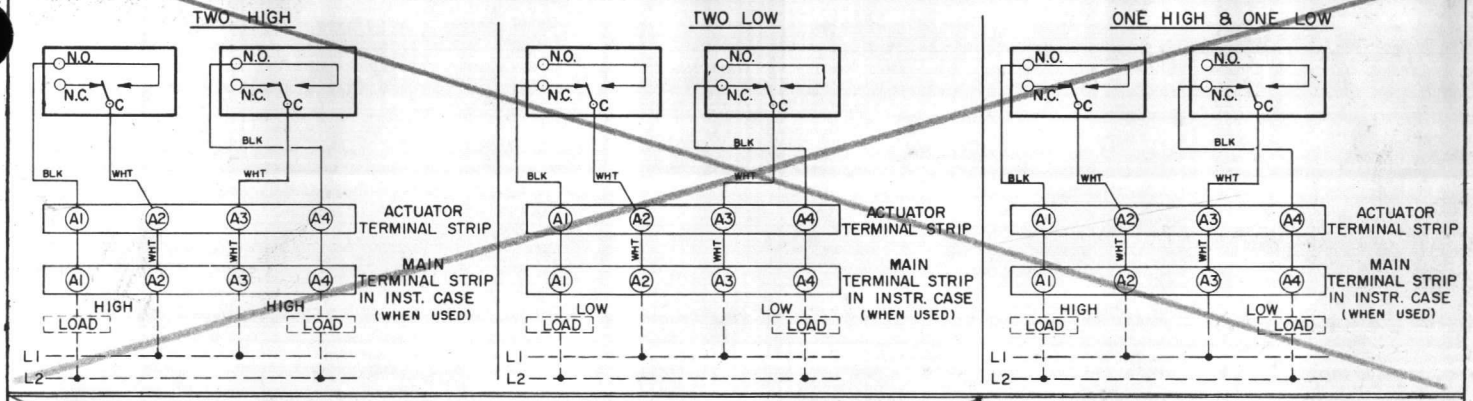

SINGLE MICRO-SWITCH

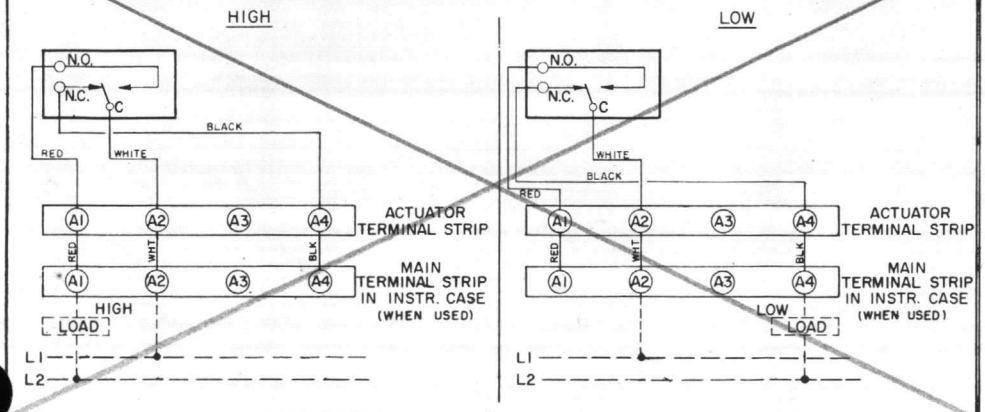

NOTES

1. SWITCHES SHOWN IN ZERO PROCESS POSITION.
2. WIRING BETWEEN ACTUATOR TERMINAL STRIP AND MAIN TERMINAL STRIP FOR:
   - A - SINGLE ALARM
     COLORS AS SHOWN.
   - B - DOUBLE ALARM
     WHEN BOTH SWITCHES ARE ACTUATED BY THE SAME SPINDLE, LOAD LINES ARE BLACK WITH WHITE COMMON WIRE.
     WHEN SWITCHES ARE ACTUATED BY SEPARATE SPINDLES, LOAD LINES ARE CODED TO MATCH INSTRUMENT PEN OR POINTER COLOR.
   - C - TRIPLE ALARM
     COMMON WIRE IS WHITE, LOAD LINES ARE COLOR CODED TO MATCH INSTRUMENT PEN OR POINTER COLOR.
3. CONTACT RATING - 2 AMPS. MAX. AT 125 OR 250 V. AC. (NON-INDUCTIVE)
4. THIS DRAWING IS NORMALLY USED AS A SUPPLEMENT TO INSTRUMENT WIRING DIAGRAM.
5. --- BROKEN LINES INDICATE CUSTOMER WIRING.

REV.	DESCRIPTION	MADE BY	CHECKED	APPV'D.
4				
3				
2	ADDED THIRD WIRE TO SINGLE ALARMS; CHANGED NOTES 1 & 2 TO INDICATE COLOR CODES ON DUAL ASSEMBLY, BOTH COMMON & NO 90 TO 60. ADDED BLACK & WHITE COLORS ON ALL NOTES.	F.A. Dunham 12 OCT '61	MATHIAS 25 OCT 61	WHM
1	NOTE #1 - WAS "ALL WIRING ON MICRO-SWITCH ACTUATOR IS BLACK. MICRO-SWITCHES SHOWN IN ZERO PROCESS POSITION."	R.A. Dunham 13 MAY 68	MATHIAS 13 MAY 68	WHM
0		F.A. Dunham 1 APRIL '68	MATHIAS 7 APR 68	WHM

B.M. No.	EBM - 28041
FIG. No.	
SCALE	
REF. DWG. No(s)	S-40771
ENGR DEPT	
PRINTS TO	1 34 PL

WIRING DIAGRAM FOR MICRO-SWITCH ACTUATOR SERIES 55AC1000

FISCHER & PORTER CO.
WARMINSTER, PA.

WD-55-1002 REV. 2

For: Brown Construction Company
Order No. 15-11
F&P Serial No. 6403 A 2916 J5
Tag: 22.3.2 Receiver and Pump Control-
Reservoir Water Level

TWO OR MORE RECEIVERS IN SERIES CONNECTION:
ONE RECEIVER UNIT RETRANSMITTING TO THE NEXT RECEIVER.
(FOR PARALLEL RECEIVERS CONNECTION SEE NOTE # 3.)

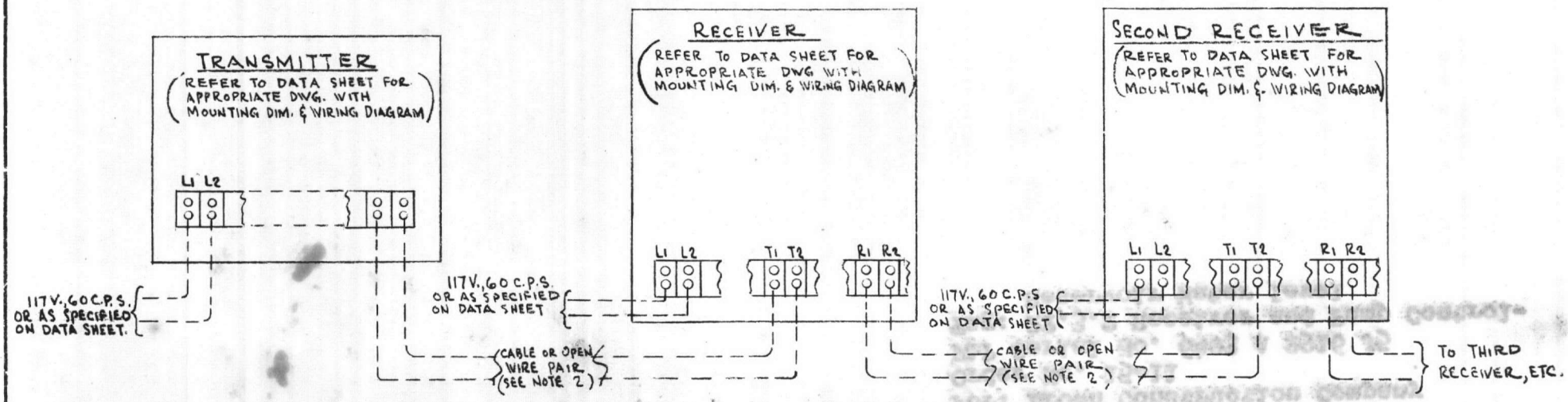

NOTES:
1.-(----) DENOTES CUSTOMER WIRING
2.-(CABLE DATA IS APPROXIMATE; USE AS A GUIDE ONLY)
A. UP TO 2500 OHM LOOP RESISTANCE

CABLE SIZE	OHMS/LOOP MI*	MAX. CABLE LENGTH
OPEN WIRE 6 AWG.	4.11 OHMS	600 MILES
8 "	6.74 "	370 "
10 "	10.15 "	240 "
19 "	100. "	25 "
22 "	171. "	14 "
24 "	271. "	9 "
26 "	431. "	5 "

* OHMS PER LOOP MILE INCLUDES STD. A.T.&T. LOADING COILS ON CABLES.
MINIMUM LEAKAGE: MINIMUM RESISTANCE DURING WORST WEATHER CONDITIONS - 50,000 OHMS.

3. FOR PARALLEL CONNECTION OF TWO OR MORE "IN-CASE" RECEIVERS TO ONE TRANSMITTER:
A SILICON DIODE (SOLITRON CER69 OR EQUIVALENT: (PIV-200V.) MUST BE INSTALLED IN SERIES WITH EACH "T1" LINE AS SHOWN:

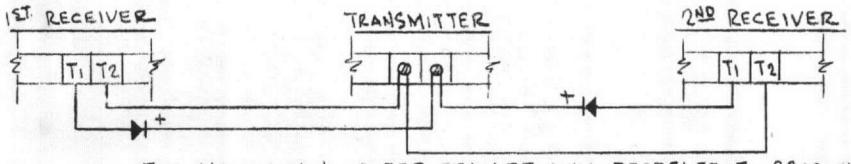

THE MAXIMUM LOOP RESISTANCE WILL DECREASE TO 2300 OHM PER RECEIVER

REV.	AUTHORIZATION	MADE BY	CHKD. BY	APPD. BY	REVISION DESCRIPTION
2		GASKILL 23 SEPT 62	[signature]	[signature]	NOTE #3 ADDED
1		R.F. Sackell 5 Feb 63	[signature]	[signature]	Revised table lengths on #22, 24, & 26 AWG. CABLE

MADE BY GASKILL - 23 NOV 62 | CHKD. BY [signature] | APPD. BY [signature] | AUTH 6209H1173J 2,5,7,8 | SCALE NONE | MODEL

REF. DWGS.

B. M. NO.

INSTALLATION WIRING DIAGRAM
"IN-CASE" TIME PULSE RECEIVER - TRANSMITTER

FISCHER & PORTER CO.
WARMINSTER, PA., U.S.A.

DRAWING NUMBER: WD-55-1019 | REV. 2

PRINTS TO

Form 55-24

For: Brown Construction Company
Order No. 15-11
F&P Serial No. 6403 A 2916 J5
Tag: 22.3.2 Receiver and Pump Control-
Reservoir Water Level